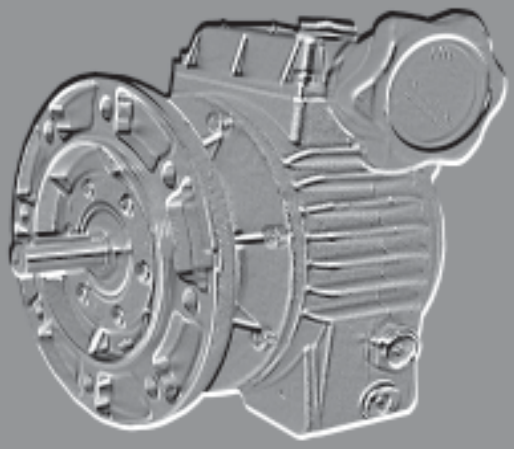

Ametric®

American Metric® Corporation

GEAR REDUCERS
VARIATORS
MOTORS

A World Class International Manufacturing Company

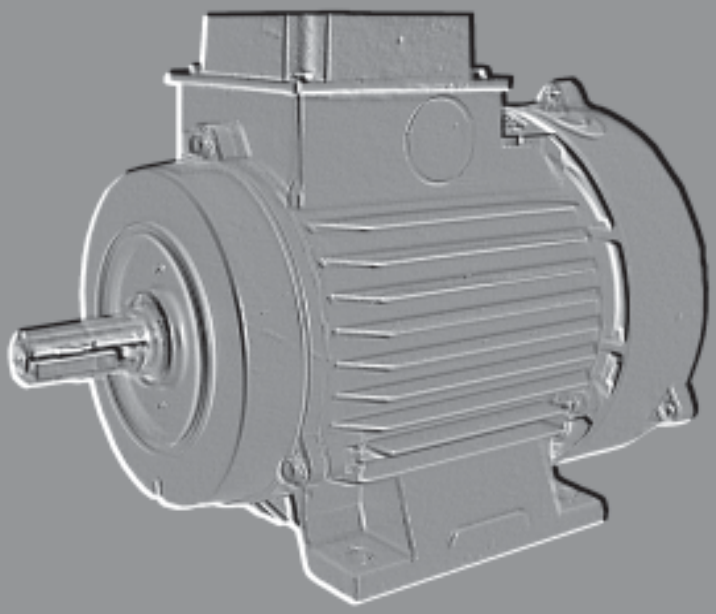

Cat. No. GRVM 0706

Why Choose Ametric®?

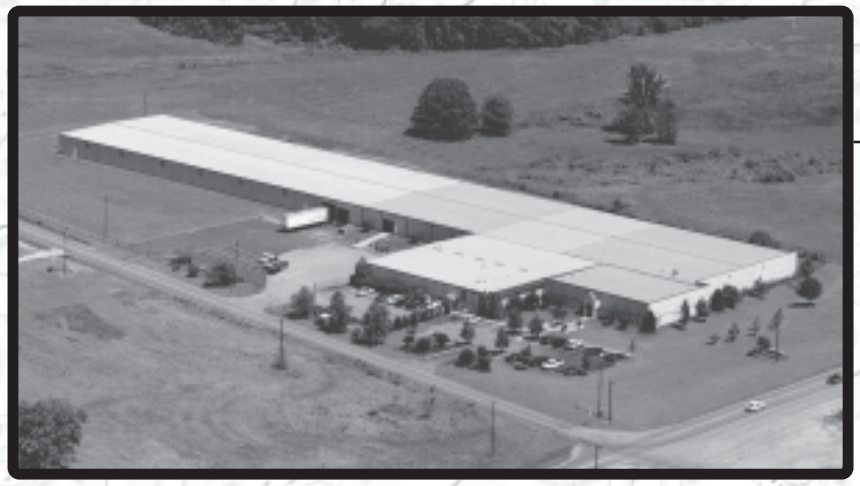

Over 250,000 Power Transmission Components

Special Products Sourcing

Technical Support

Customer Service Available up to 6 p.m. EST

Complete Machine Shop

Same Day Shipments

Sold by Leading Power Transmission Distributors World Wide

TABLE OF CONTENTS

HEADING	GENERAL INFORMATION	PAGE
1.0	**Introduction**	2
1.1	Symbols	2
1.2	Units of Measurement	2
1.3	Power	2
1.4	Gear Ratio	2
1.5	Twisting Moment	2
1.6	Efficiency	3
1.7	Irreversibility	3
1.8	Service Factor	4
1.9	Radial/Axial Loads	4
1.10	Lubrication	5
1.11	Installation	5
1.12	Painting	5
1.13	Maintenance	5
1.14	Technical Specifications	5
1.15	Warranty	5
2.0	**Worm Gearboxes**	7
2.1	Symbols and Designation	7
2.2	Versions	8
2.3	Mounting Positions	9
2.4	Dimensions	10-30
2.5	Accessories	31
2.6	Possible Set-Ups	31
2.7	Performance of Reduction Gears	32-33
2.8	Performance of Motor Reduction Gears	34-37
3.0	**Combined Worm Gearboxes and Worm Gear Motors**	39
3.1	Symbols and Designation	39
3.2	Versions	40
3.3	Mounting Positions	41
3.4	Dimensions	42-43
3.5	Performance of Reduction Gears	44-45
3.6	Performance of Motor Reduction Gears	46-47
4.0	**Worm Gearboxes and Worm Gear Motors with Primary Reduction (helical gears)**	49
4.1	Symbols and Designation	49
4.2	Versions	50
4.3	Dimensions	51-60
4.4	Performance of Reduction Gears	61-62
4.5	Performance of Motor Reduction Gears	62-63
5.0	**Metric IEC Standard Motors**	65
5.1	Output Range	66
5.2	Standards	66
5.3	General Characteristics	66
5.4	Construction	66-68
5.5	Technical Data	68-101
5.6	Electrical Data	102-115
5.7	Motor Bases	116-118
6.0	**Variators**	120
6.1	Operating Principle	120
6.2	Designation	121
6.3	Technical Data	121-122
6.4	Lubrication	123
6.5	Mounting Positions	123
6.6	Terminal Box and Speed Control Box Position	123
6.7	Dimensions	123-124

1. 0 INTRODUCTION

Ametric® intends to boost its presence in the marketplace by drawing on its twin strengths of quality and an ongoing commitment to product improvement aimed at satisfying all our customer's needs. Our versatility allows us to satisfy requests for special reduction gears. Each unit is tested prior to shipping for optimum performance. All units are handcrafted by artisans in Italy.

1.1 SYMBOLS

P	= Power (RD)
P1	= Power (FRD)
Pu	= Output Power
i	= Gear Ratio
it	= Total Gear Ratio (for combined gears)
i1	= 1° Reduction Gear Ratio
i2	= 2° Reduction Gear Ratio
ic	= Gear Ratio with Pretorque
itc	= Total Gear Ratio with Pretorque
n1	= Input RPM
n2	= Output RPM
M1	= Output Twisting Moment (RD)
M1'	= Output Twisting Moment (FRD)
M2	= Twisting Moment Requested
Mc	= Twisting Moment Calculated
Rd	= Dynamic Efficiency
Rs	= Static Efficiency
FG	= Guarantee Factor
Fs	= Service Factor
CR	= Low-Speed Shaft Radial Load
CA	= Low-Speed Shaft Axial Load
CRV	= High-Speed Shaft Radial Load
CAV	= High-Speed Shaft Axial Load

1.2 UNITS OF MEASUREMENT

P	KW	
P1	KW	1KW = 1.36 HP
Pu	KW	
n1	RPM	
n2	RPM	
M1	Nm	
M2	Nm	1Nm = 0.1daNm
MC	Nm	1Nm = 0.1 Kgm
CR	N	
CA	N	1N = 0.1 daN
CRV	N	1N = 0.1 Kg
CAV	N	

1.3 POWER

P (KW) – Applicable input power relating to velocity n1, and to a service factor Fs = 1. (see reduction gear performance tables on page 32)

P1 (KW1) - Power applied to reduction gear set up with motor flange (FRD) according to unified standards.

Pu (KW) – Output power transmitted by reduction gear, calculated with:

$$Pu = P \times Rd \quad \text{or} \quad Pu = \frac{M1 \times n2}{9550}$$

1.4 GEAR RATIO

i – Value required to identify the reduction gear:

$$i = \frac{n1}{n2}$$

it – Total gear ratio for the combined reduction gear, given by:

$$it = i1 \times i2$$

i1 – Driving reduction gear ratio
i2 – Driven reduction gear ratio
ic – Pretorque reduction gear ratio
itc – Total reduction gear ratio of pretorque, given by:

$$itc = ic \times i$$

1.5 TWISTING MOMENT

M1 – Output torque transmitted by reduction gear (RD) with a uniform load with reference to input velocity n1, and output velocity n2, calculated with a service factor S = 1.

M1' - Output torque transmitted by reduction gear (FRD) with reference to the motor applied.

M2 – Torque required by the application; it must always be lower than the value of M1.

Mc – Torque value to be used to select the reduction gear, calculated as follows:

$$Mc = M2 \times Fs \text{ must be} < M1$$

The torque value Mc must be adjusted by the factor Ft, which is given by the combination ambient temperature and type of load:

$$Mc = M2 \times Fs \times Ft < M1$$

Temperature Factor Ft				
Type of Load	Ambient Temperature (C°)			
	20°	30°	40°	50°
Uniform Load	1	1.05	1.2	1.4
Load with Moderate Impact	1	1.03	1.15	1.32
Load with High Impact	1	1.01	1.08	1.22

1.6 EFFICIENCY

Rd – Dynamic efficiency determined by output power (Pu) and input power (P). Other factors determined in the Rd calculation are: rate of slide, type of lubrication and helix angle of gear mesh.
N.B. The optimal efficiency value is obtained after an initial running-in period.

Rs – Efficiency at time of reduction gear start-up, which varies according to the gear ratio. The choice of motor is therefore important, especially when intermittent applications are involved.

The values are shown in the performance table.

Type	Static Efficiency i														
	7	7.5	10	15	20	25	30	35	40	45	50	60	70	80	100
30		0.79	0.74	0.65	0.57		0.49		0.40		0.37	0.35	0.33	0.30	0.28
40		0.82	0.77	0.69	0.60		0.53		0.43		0.42	0.38	0.35	0.33	0.29
50		0.83	0.78	0.70	0.69		0.54		0.53		0.44	0.42	0.40	0.36	0.31
63	0.81		0.77	0.69	0.66	0.63	0.54	0.51	0.49	0.47	0.44	0.40	0.39	0.35	0.31
70	0.80		0.76	0.70	0.65	0.62	0.54	0.52	0.50	0.47	0.45	0.41	0.38	0.35	0.35
85	0.81		0.77	0.71	0.68	0.65	0.55	0.53	0.53	0.51	0.50	0.46	0.43	0.41	0.37

1.7 IRREVERSIBILITY

The reversibility of a reduction gear is determined by a high mesh angle (favoring low ratios), while irreversibility is determined by a low helix angle (high ratios 1/70, 1/80, 1/100), and also by the type of load and any impact.

Static irreversibility **–** This is the state in which it is not possible to have rotation of the low speed shaft. Only in particular conditions and when loads are subject to vibrations might a very slow return occur. The lower the value of Rs, the greater the irreversibility will be. Theoretically, the conditions are as follows:

Rs < 0.45 there is irreversibility
Rs 0.45-0.55 irreversibility uncertain
Rs > 0.55 there is reversibility

Dynamic irreversibility **–** This is the condition required to stop and therefore hold the load at the moment the drive action ceases. This is the most difficult condition to achieve because it is influenced by the efficiency Rd, by the rotation velocity and by possible vibrations that may be generated by the load. Theoretically, the following indications can be given:

Rd < 0.5 there is dynamic irreversibility
Rd > 0.5 there is dynamic reversibility
The table shows the degree of reversibility versus gear ratio.

NB **– Since total irreversibility cannot be assured, the mechanism must be provided with an external braking action.**

Type of Reversibility		RD – FRD					
		30	40	50	63	70	85
Total Reversibility	i		7.5	7.5	7	7	7
Good Dynamic and Static Reversibility with Rapid Return	i	7.5 10	10 15	10 15	10 15	10 15	10 15
Possible Dynamic Reversibility, Uncertain Static Irreversibility, Rapid Return with Vibrations	i	15 20 30	20 30	20 30 40	20-25 30-35 40	20-25 30-35 40-45	20-25 30-35 40-45 50
Dynamic Reversibility Virtually Zero, Static Irreversibility, Stop-Start Return with Vibrations	i	40 50 60	40-50 60 70	50-60 70 80	45-50 60-70 80	50-60 70 80	60 70 80
No Dynamic Reversibility, Static Irreversibility, No Return	i	70 80 100	80 100	100	100	100	100

1.8 SERVICE FACTOR

Fs – Value that takes into account the various operating states (start-up frequency, nature of load and duration) to which the reduction gear is subjected; the power ratings and twisting moments indicated in the reduction gear (RD) performance tables are nominal, i.e. valid for a service factor Fs = 1, and they correspond to the service factor given in the table, for reduction gears set up with motor flange (FRD).

Nature of Load	h/work	Start-Up Frequency/h							
		4	8	16	32	65	130	250	500
Uniform Load	<2	0.7	0.75	0.78	0.8	0.85	0.9	0.97	1.13
	2 ÷ 4	0.9	0.92	0.96	1	1.11	1.14	1.16	1.18
	4 ÷ 8	1	1.1	1.13	1.28	1.33	1.34	1.35	1.38
	8 ÷ 16	1.3	1.35	1.4	1.5	1.54	1.55	1.61	1.72
	16 ÷ 24	1.6	1.7	1.75	1.8	1.9	2	2.06	2.2
Small Overloads	<2	0.83	0.85	0.9	0.95	1	1.05	1.13	1.19
	2 ÷ 4	1	1.16	1.2	1.24	1.26	1.35	1.4	1.5
	4 ÷ 8	1.25	1.3	1.35	1.4	1.5	1.55	1.6	1.8
	8 ÷ 16	1.5	1.6	1.6	1.8	1.85	1.95	2	2.1
	16 ÷ 24	1.8	2	2.05	2.15	2.3	2.4	2.5	2.6
Major Overloads	<2	1	1	1	1.1	1.15	1.2	1.25	1.3
	2 ÷ 4	1.3	1.3	1.3	1.4	1.45	1.5	1.55	1.6
	4 ÷ 8	1.5	1.5	1.55	1.7	1.75	1.8	1.90	2
	8 ÷ 16	1.85	1.85	1.95	2.1	2.2	2.3	2.4	2.5
	16 ÷ 24	2.2	2.3	2.35	2.5	2.6	2.7	2.9	2.9

1.9 RADIAL LOAD (CR) and AXIAL LOAD (CA)

CR – Every type of transmission generates radial loads both in the input shaft (high speed) and in the output shaft (low speed). The values in the tables have been calculated for a force acting midway along the projecting shaft; for a load positioned at 1/3 of the length, increase the table values by 25%; for a load positioned at 2/3 of the length, reduce the values by 25%.

CA – The Axial Load values (CA for low speed shaft, CAV for high speed shaft) are 20% of the Radial Load values.
For shafts projecting at both ends, each end can support a load equal to 3/5 of the values shown in the table, provided they move in the same direction and have the same intensity.
We recommend that the chain wheel, gear or pulley be installed as close as possible to the shaft stop.

The values in the tables are expressed in daN.

Type	n2 (RPM) – (U/min)												
	200	187	140	93	70	56	47	40	35	30	23	17	14
30		70	78	88	92	99	104	108	115	122	130	144	148
40		98	106	116	130	141	152	160	165	173	190	195	215
50		129	147	164	188	198	205	211	222	233	258	287	308
63	181	190	204	235	263	285	295	312	327	343	383	400	443
70	197	207	221	256	284	309	320	342	362	381	424	443	495
85	248	259	275	312	348	379	393	421	442	460	521	538	592

Type	n1 (RPM) – (U/min)			
	1400	900	700	500
30	10	10	10	12
40	16	18	20	25
50	24	27	30	34
63	33	35	38	42
70	44	48	53	58
85	55	58	62	66

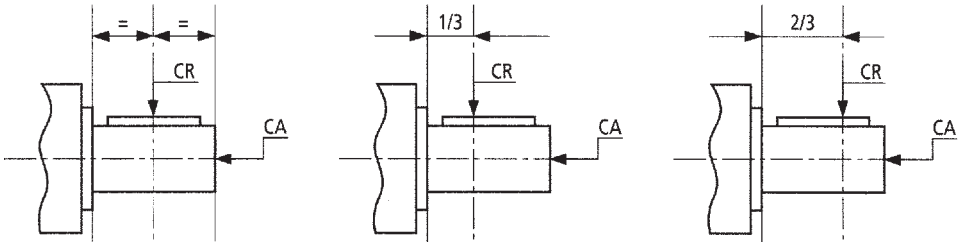

1.10 LUBRICATION

Our reduction gears are supplied life-lubricated with synthetic oil. However a plug is fitted for use if necessary. Unless specific requests are made, the type of oil used is *"TIVELA OIL SC 320"*.

1.11 INSTALLATION

It is important to secure the motor reduction gear so that vibrations are not transmitted during operation, because they are a source of noise and premature wear due to variable fatigue. With regard to continuous starts under load, we recommend that the motor be protected with thermal probes so that overheating due to overloads does not lead to coil meltdown.

1.12 PAINTING

Up to and including size 70, the reduction gears are made from aluminum and no painting of any kind is provided.
From size 85 up, the reduction gears are made from cast iron and painted.
For paint specification requests, please contact our Special Products Department.

1.13 MAINTENANCE

Since our reduction gears are supplied with life-lubricated synthetic oil, no particular maintenance is required apart from external cleaning. Do not use solvents for cleaning as they may damage the seal rings and gaskets.

1.14 TECHNICAL SPECIFICATIONS

Technical specifications shown in this catalog are subject to change without notification. Please contact our customer service team for the most current information.

1.15 WARRANTY

There are no warranties, of merchantability, fitness for purpose, or express, that extend beyond the description contained herein. The parties agree that the buyer's sole exclusive remedy against the seller shall be repair or replacement of defective parts of goods. The buyer agrees that no other remedy, including, but not limited to, consequential and incidental damages, shall be available to him.

2.0 WORM GEARBOXES

AMETRIC® gearboxes are appreciated for their reliability and noise-free operation, which are crucial characteristics of a good product. This has been achieved by the systematic control of processes, from selecting the materials right through to assembly, every single phase of which is performed manually by trained personnel.

Up to and including size 70, the external parts (box, flanges, feet, etc.) are made from SGALSI 91 UNI 7369 aluminum. From size 85 up they are made from mechanical cast iron G20-UNI 5007.

•TRANSMISSION MECHANISM
Up to size 50, there are 11 gear ratios: for sizes 63, 70 and 85 there are 14 gear ratios (personalized gear ratios can be considered on request).

•WORM GEARS
Made from nickel-chrome-molybdenum steel and case hardened to obtain a specific surface hardness (ensuring long life and wear strength) and a tough, elastic core to withstand mechanical impact. **The profile is ground to an involute shape (Z1).**

•CROWN GEARS
Built with central hub in cast iron (G20-UNI 5007), onto which a bronze layer is cast (B14-UNI 1701).

•BEARINGS
Ball type with wide face; from center distance 50 taper roller bearings are mounted on the high speed shaft (WORM GEAR).

•SEAL RINGS
Double lip seal rings are fitted on all types to ensure enhanced tightness.

2.1 SYMBOLS AND DESIGNATION

RD - WORM GEARBOXES	FRD - WORM GEARBOXES WITH MOTOR FLANGE
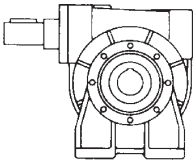	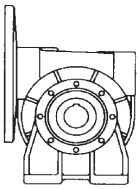

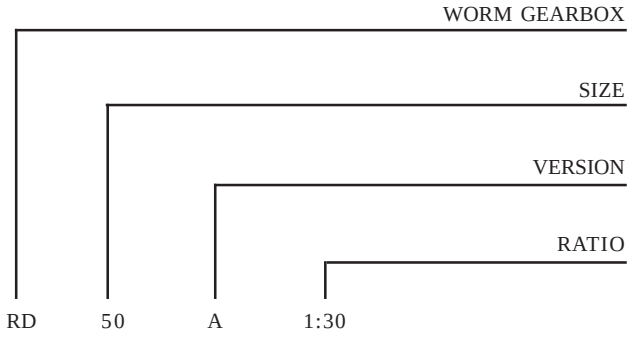

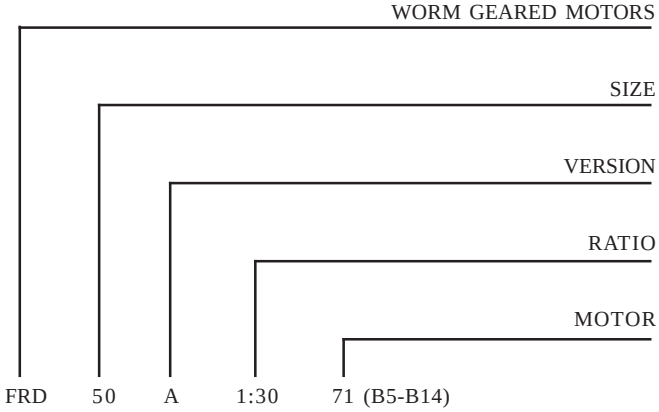

N.B. - Unless otherwise specified, the FB flange will be fitted as per the catalog.

2.2 VERSIONS

FRD / A

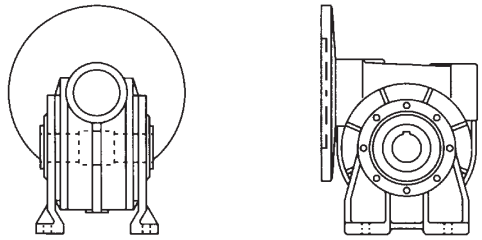

RD / A

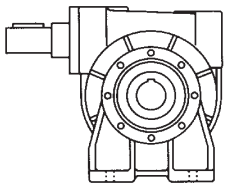

FRD / B

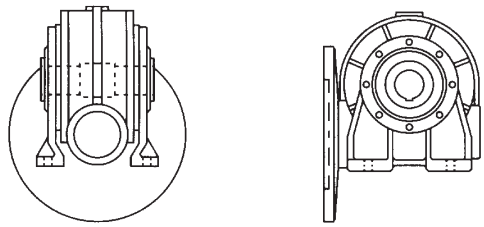

RD / B

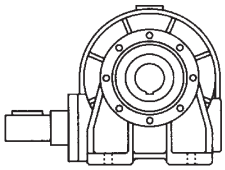

FRD / V

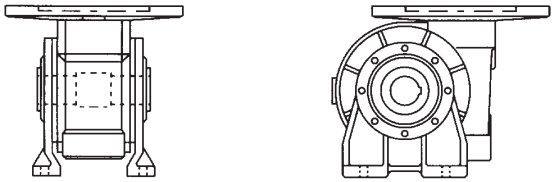

RD / V

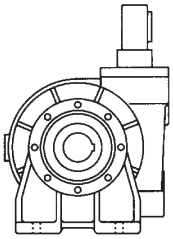

FRD / FB

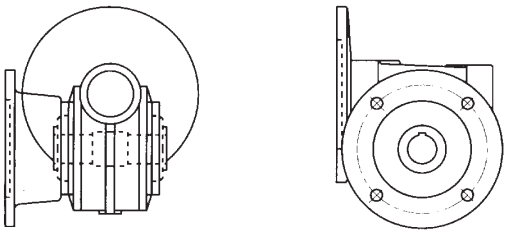

RD / FB

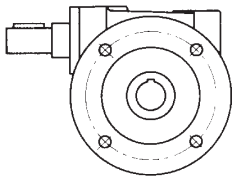

FRD / FP

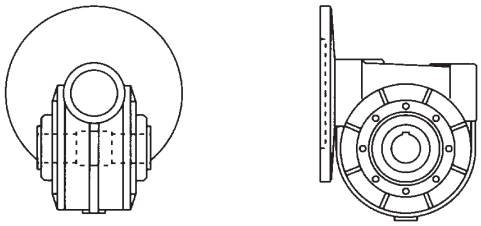

RD / FP

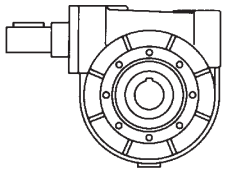

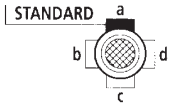

Terminal Board Position

2.3 MOUNTING POSITIONS

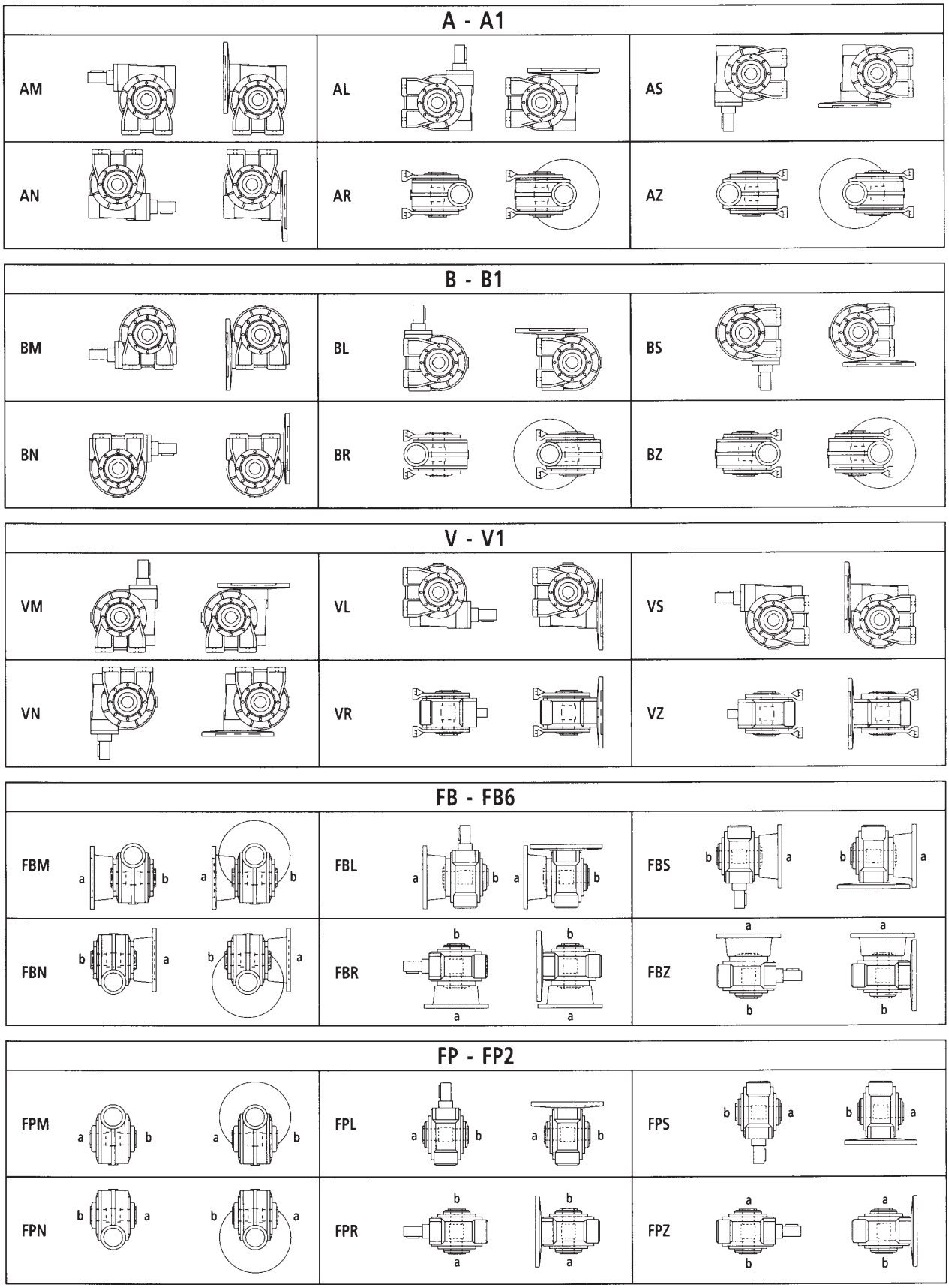

2.4 DIMENSIONS

FRD 30/A (A1)

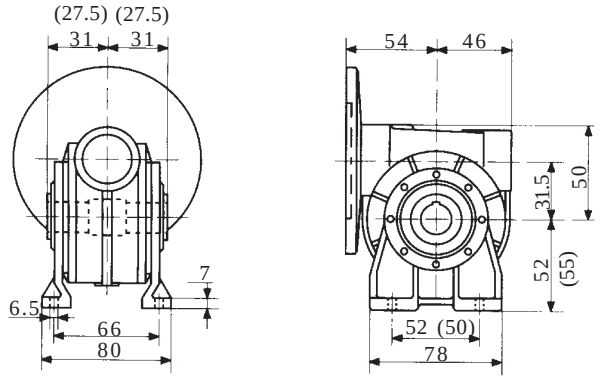

RD 30/A (A1)

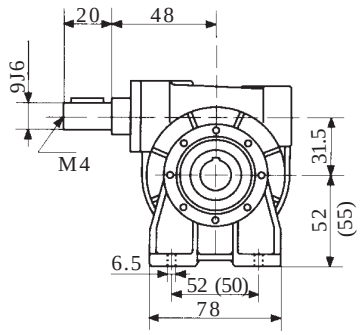

FRD 30/B (B1)

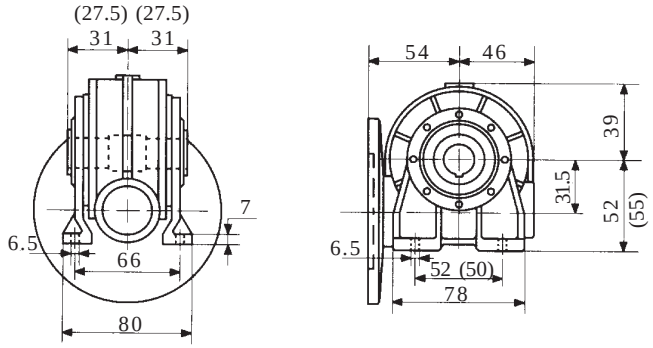

RD 30/B (B1)

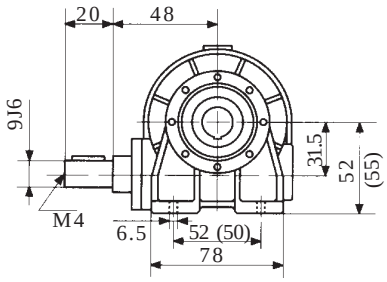

FRD 30/V (V1)

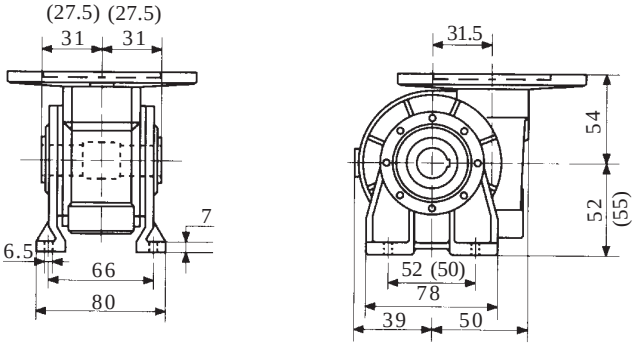

RD 30/V (V1)

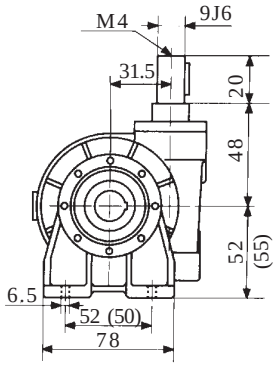

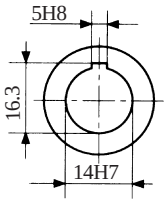

Standard Output Hollow Bore

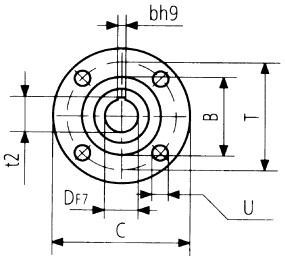

Motor Flange

Motor Flange Dimensions

	A - B - V	C	B	T	U	DF7	bh9	t2 +0.1 0
B5	56	120	80	100	7	9	3	10.4
	63	140	95	115	9.5	11	4	12.8

B14	56	80	50	65	5.5	9	3	10.4
	63	90	60	75	5.5	11	4	12.8

FRD 30 FB

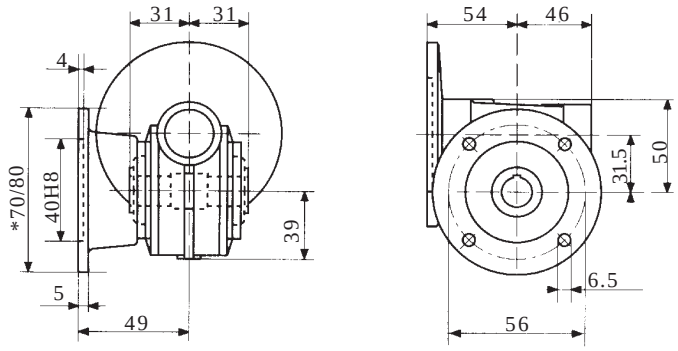

*by request

RD 30 FB

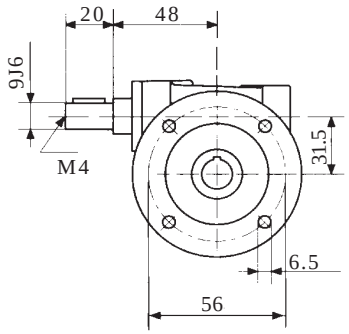

FRD 30 FB1

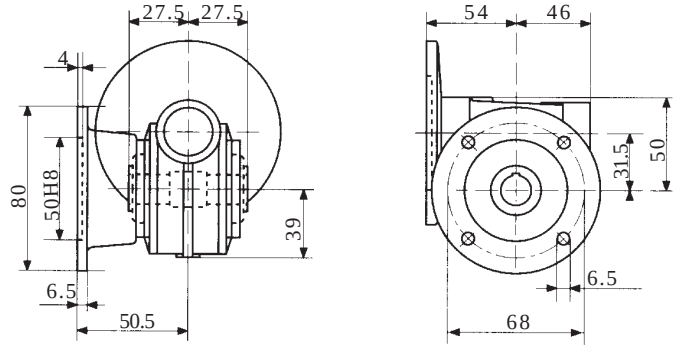

RD 30 FB1

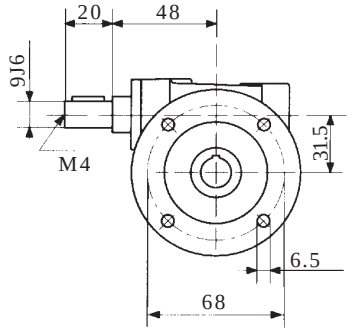

FRD 30 FB2

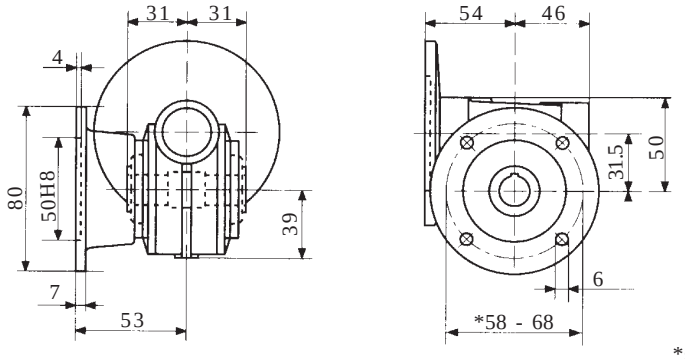

*slot

RD 30 FB2

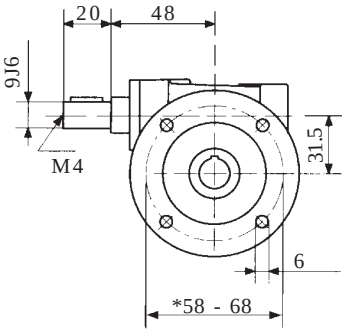

*slot

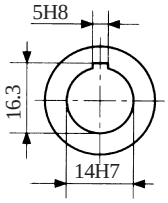

Standard Output
Hollow Bore

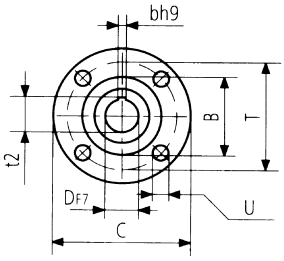

Motor Flange

Motor Flange Dimensions

	FB	C	B	T	U	DF7	bh9	t2 +0,1 0
B5	56	120	80	100	7	9	3	10.4
	63	140	95	115	9.5	11	4	12.8
B14	56	80	50	65	5.5	9	3	10.4
	63	90	60	75	5.5	11	4	12.8

FRD 30 FP

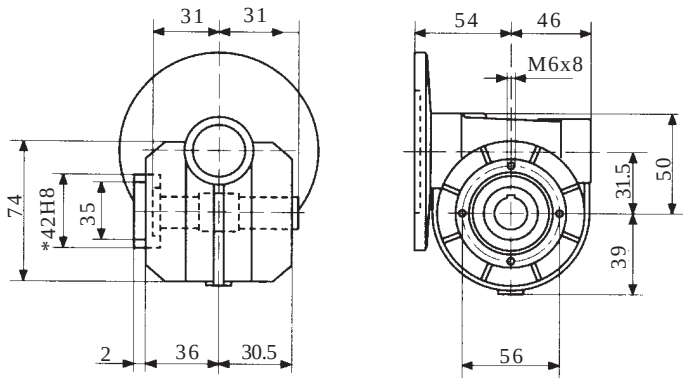

*Option 42H8 (female) Depth 6.5

RD 30 FP

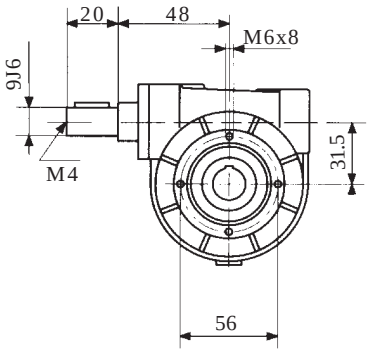

FRD 30 FP1

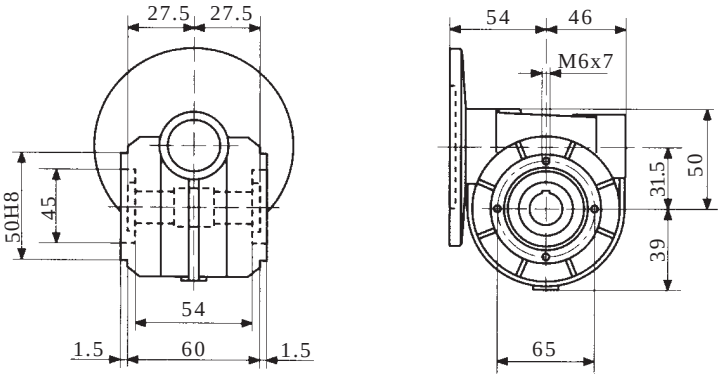

RD 30 FP1

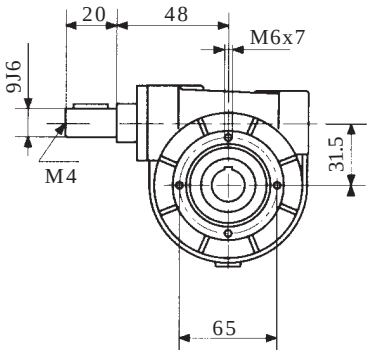

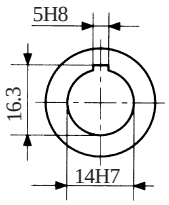

Standard Output
Hollow Bore

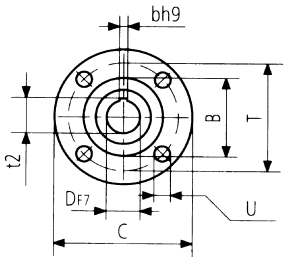

Motor Flange

Motor Flange Dimensions

	FP	C	B	T	U	DF7	bh9	t2 +0.1 0
B5	56	120	80	100	7	9	3	10.4
	63	140	95	115	9.5	11	4	12.8
B14	56	80	50	65	5.5	9	3	10.4
	63	90	60	75	5.5	11	4	12.8

FRD 40/A (A1)

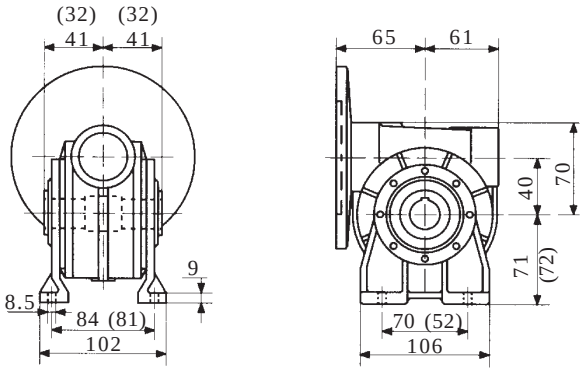

RD 40/A (A1)

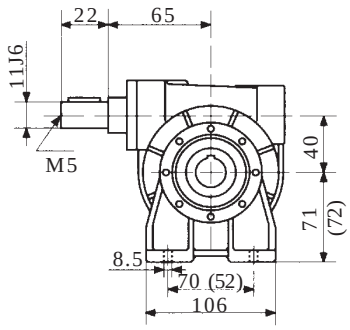

FRD 40/B (B1)

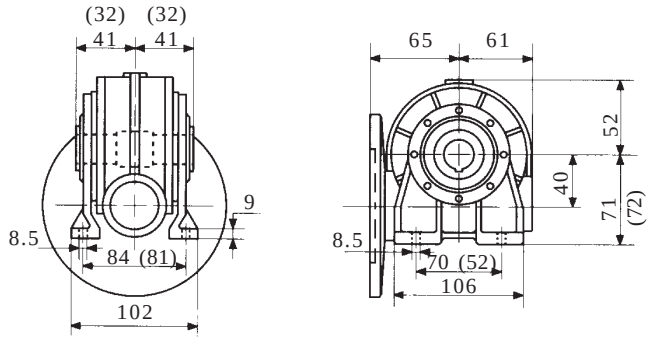

RD 40/B (B1)

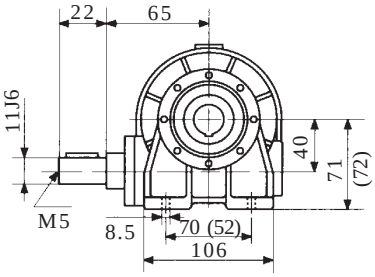

FRD 40/V (V1)

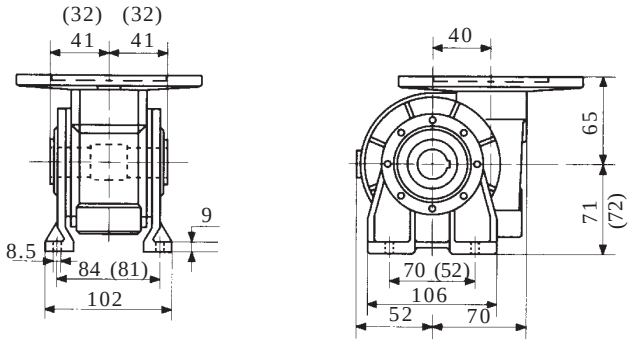

RD 40/V (V1)

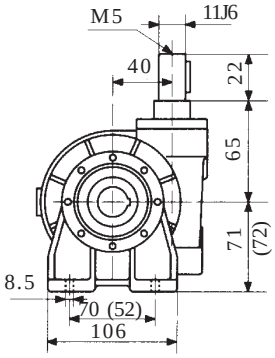

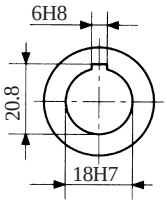

Standard Output Hollow Bore

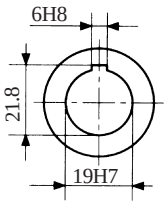

Optional Output Hollow Bore

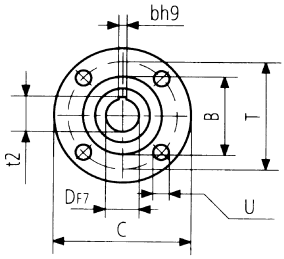

Motor Flange

Motor Flange Dimensions

	A - B - V	C	B	T	U	DF7	bh9	t2 +0.1 0
B5	56	120	80	100	7	9	3	10.4
	63	140	95	115	9.5	11	4	12.8
	71	160	110	130	9.5	14	5	16.3
B14	56*	80	50	65	5.5	9	3	10.4
	63	90	60	75	5.5	11	4	12.8
	71	105	70	85	7	14	5	16.3

*See note on page 31.

FRD 40 FB

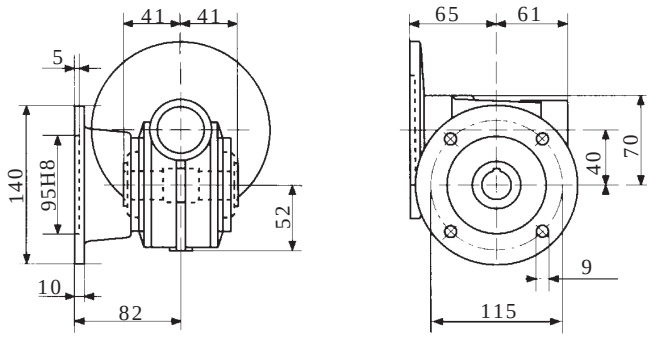

RD 40 FB

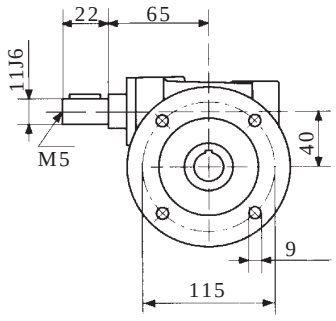

FRD 40 FB1

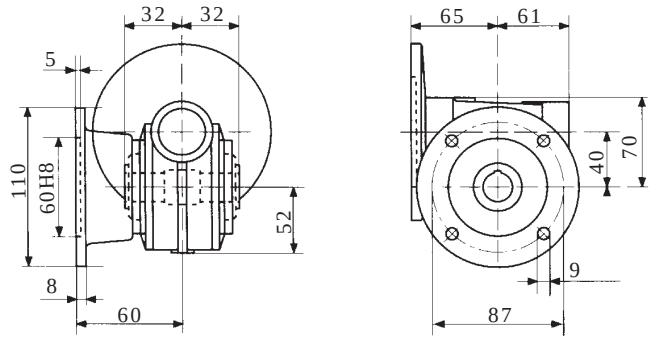

RD 40 FB1

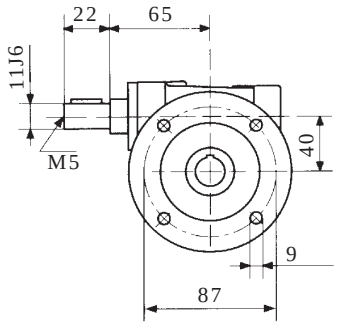

FRD 40 FB2

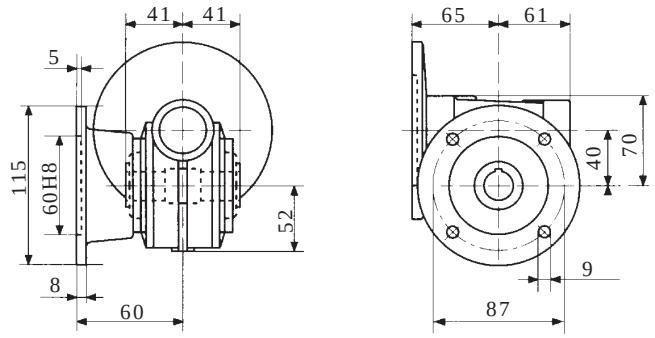

RD 40 FB2

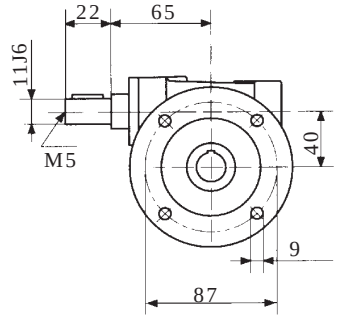

FRD 40 FB3

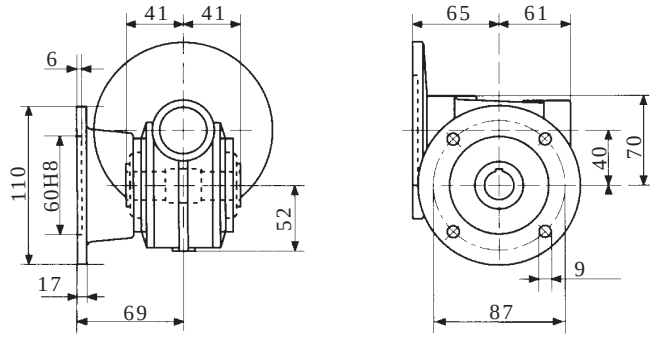

RD 40 FB3

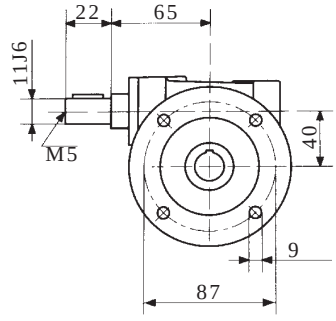

FRD 40 FB4

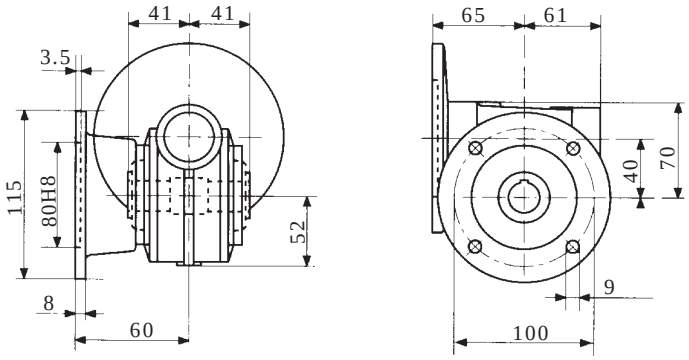

RD 40 FB4

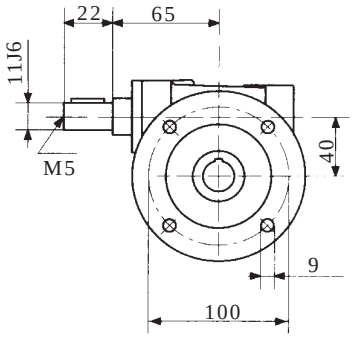

FRD 40 FB5

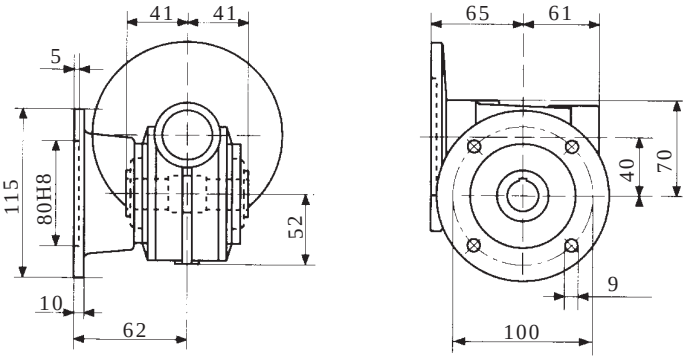

RD 40 FB5

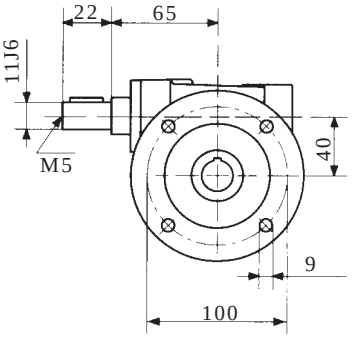

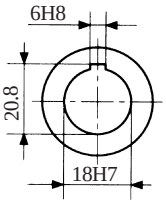

Standard Output Hollow Bore

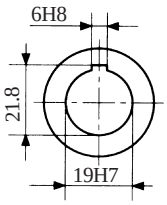

Optional Output Hollow Bore

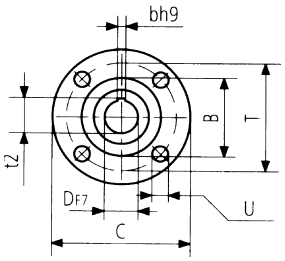

Motor Flange

Motor Flange Dimensions

	FB	C	B	T	U	DF7	bh9	t2 +0.1 0
B5	56	120	80	100	7	9	3	10.4
	63	140	95	115	9.5	11	4	12.8
	71	160	110	130	9.5	14	5	16.3
B14	56*	80	50	65	5.5	9	3	10.4
	63	90	60	75	5.5	11	4	12.8
	71	105	70	85	7	14	5	16.3

*See note on page 31.

FRD 40 FP

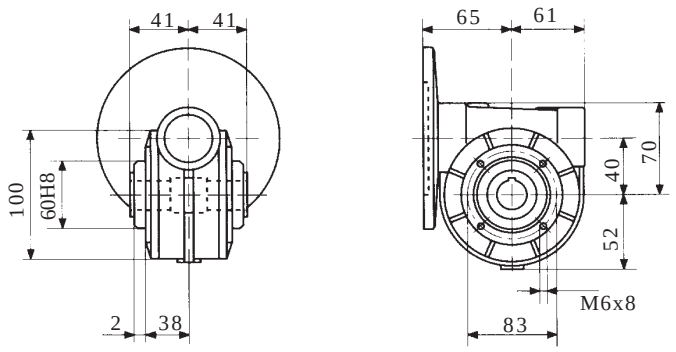

RD 40 FP

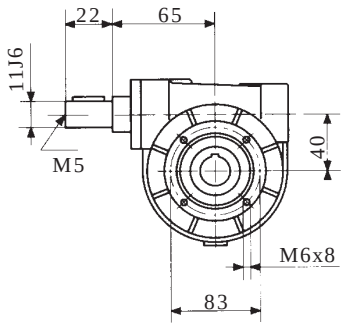

FRD 40 FP1

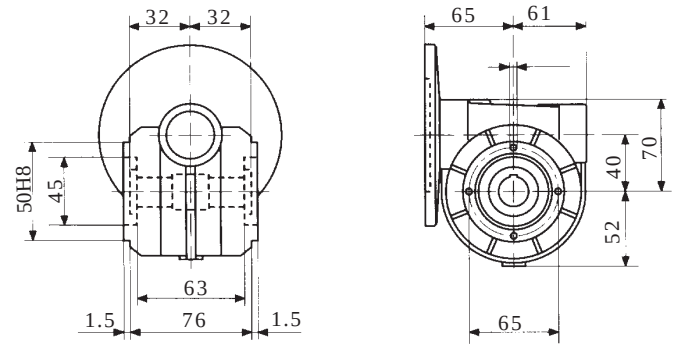

RD 40 FP1

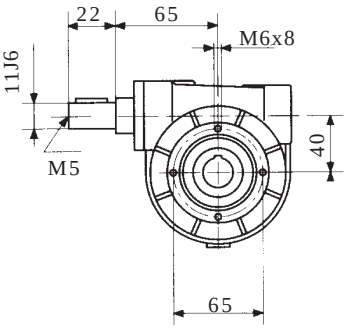

FRD 40 FP2

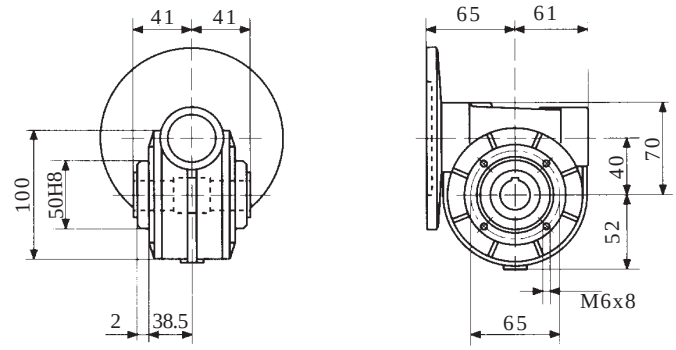

RD 40 FP2

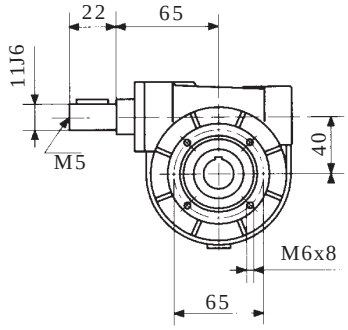

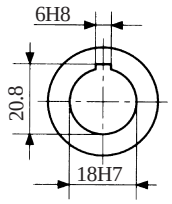

Standard Output Hollow Bore

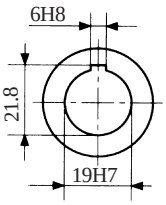

Optional Output Hollow Bore

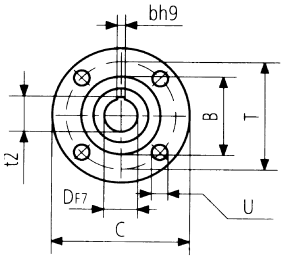

Motor Flange

Motor Flange Dimensions

	FP	C	B	T	U	DF7	bh9	t2 +0.1 0
B5	56	120	80	100	7	9	3	10.4
	63	140	95	115	9.5	11	4	12.8
	71	160	110	130	9.5	14	5	16.3

B14	56*	80	50	65	5.5	9	3	10.4
	63	90	60	75	5.5	11	4	12.8
	71	105	70	85	7	14	5	16.3

*See note on page 31.

FRD 50/A (A1)

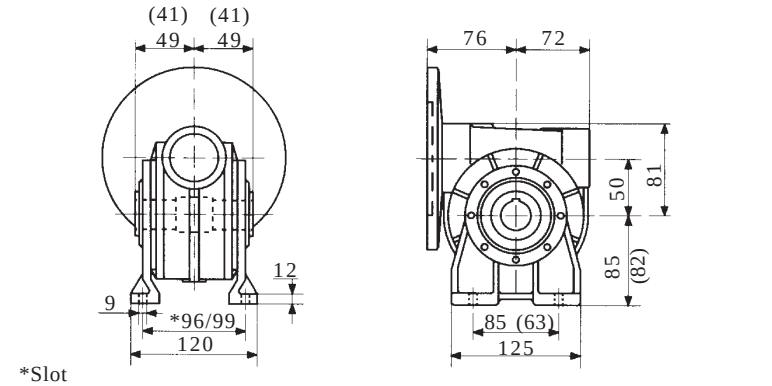

*Slot

RD 50/A (A1)

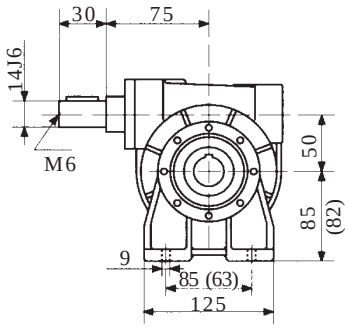

FRD 50/B (B1)

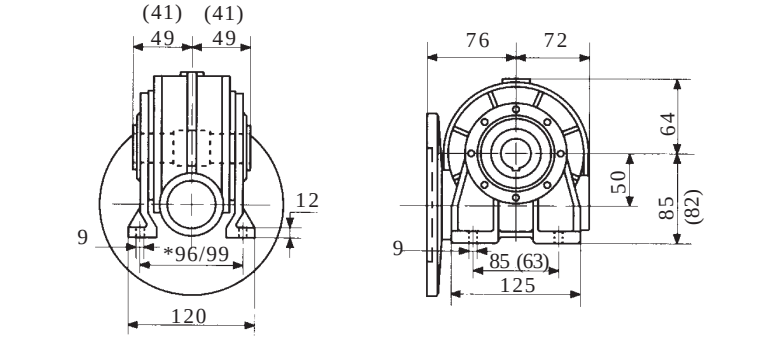

*Slot

RD 50/B (B1)

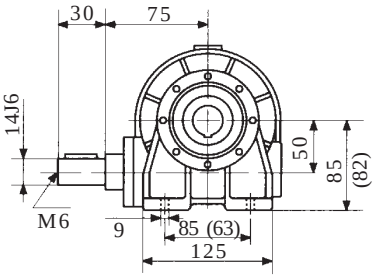

FRD 50/V (V1)

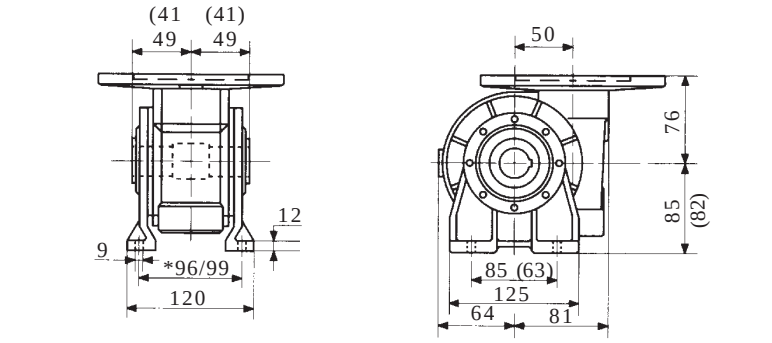

*Slot

RD 50/V (V1)

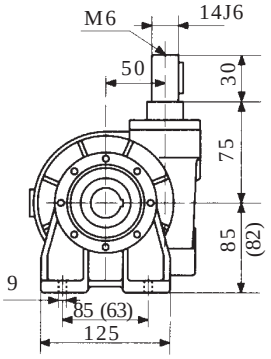

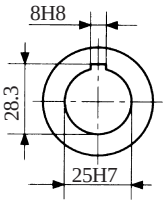

Standard Output Hollow Bore

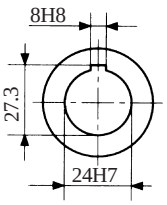

Optional Output Hollow Bore

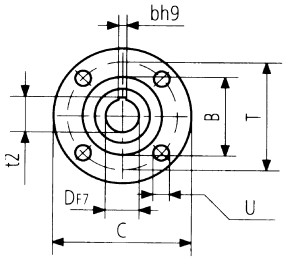

Motor Flange

Motor Flange Dimensions

	A - B - V	C	B	T	U	DF7	bh9	t2 +0.1 -0
B5	63	140	95	115	9.5	11	4	12.8
	71	160	110	130	9.5	14	5	16.3
	80	200	130	165	11.5	19	6	21.8
B14	63*	90	60	75	5.5	11	4	12.8
	71	105	70	85	7	14	5	16.3
	80	120	80	100	7	19	6	21.8

*See note on page 31.

FRD 50 FB

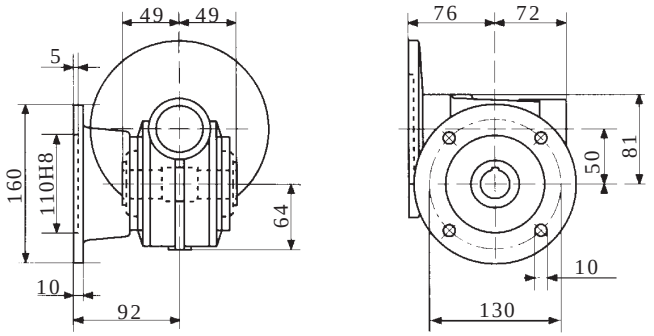

RD 50 FB

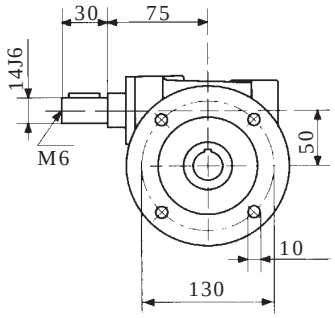

FRD 50 FB1

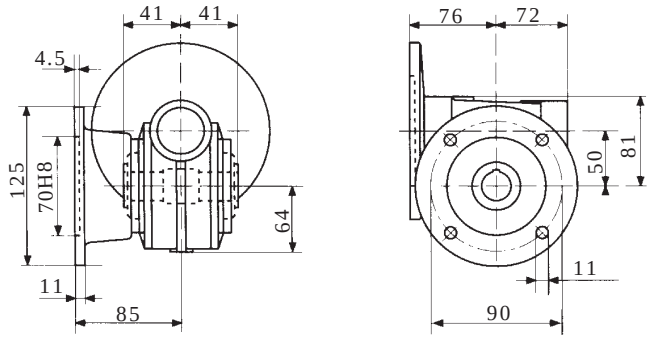

RD 50 FB1

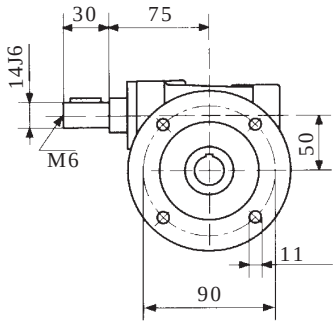

FRD 50 FB2

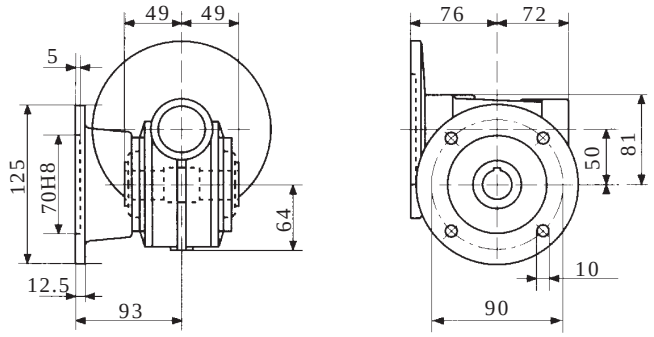

RD 50 FB2

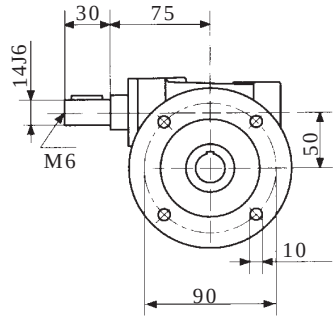

FRD 50 FB3

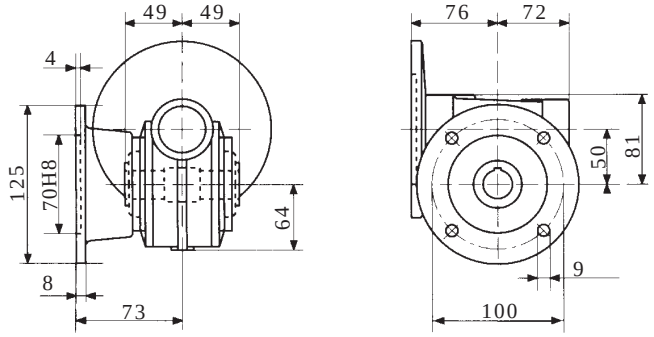

RD 50 FB3

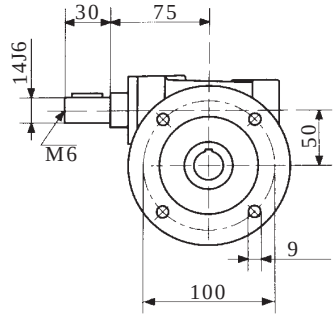

FRD 50 FB4

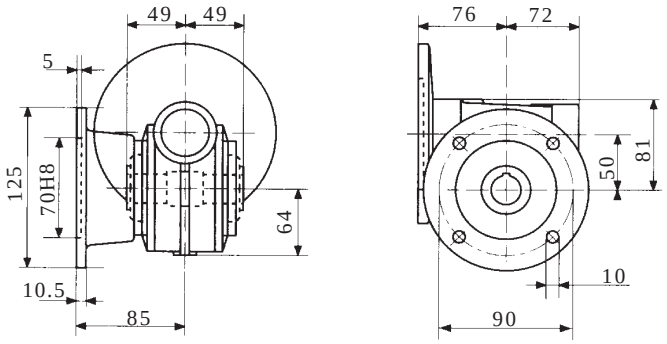

RD 50 FB4

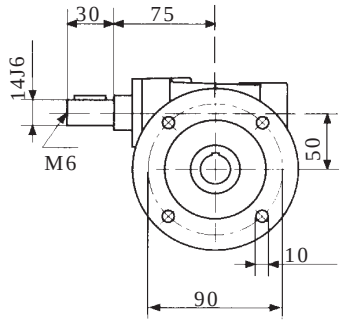

FRD 50 FB5

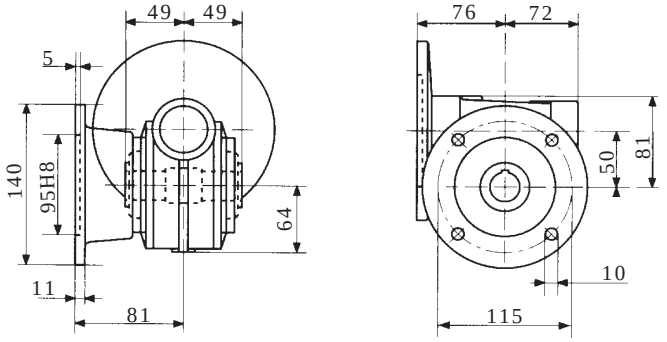

RD 50 FB5

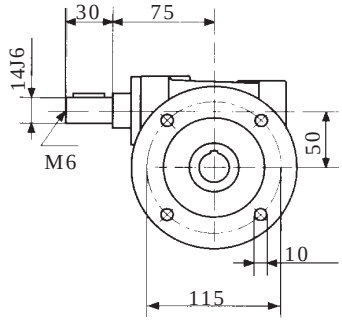

FRD 50 FB6

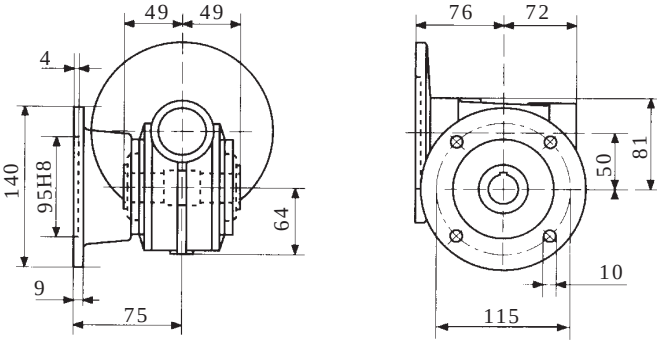

RD 50 FB6

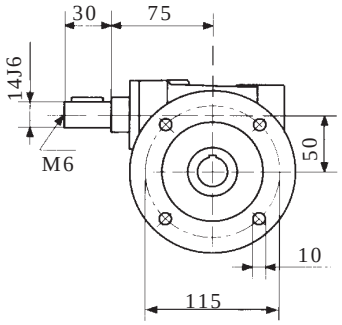

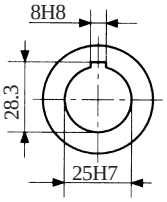

Standard Output Hollow Bore

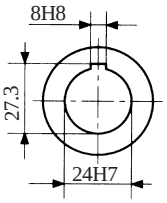

Optional Output Hollow Bore

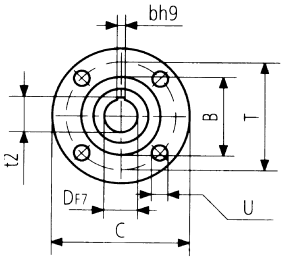

Motor Flange

Motor Flange Dimensions

	FB	C	B	T	U	DF7	bh9	t2 +0.1 0
B5	63	140	95	115	9.5	11	4	12.8
	71	160	110	130	9.5	14	5	16.3
	80	200	130	165	11.5	19	6	21.8
B14	63*	90	60	75	5.5	11	4	12.8
	71	105	70	85	7	14	5	16.3
	80	120	80	100	7	19	6	21.8

*See note on page 31.

FRD 50 FP

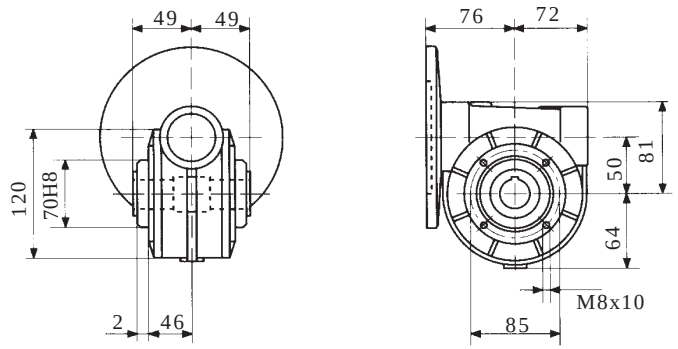

RD 50 FP

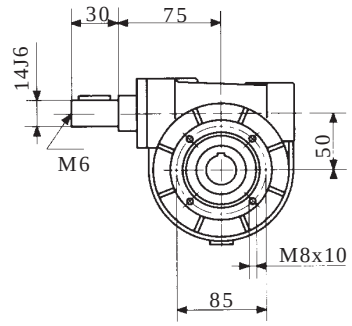

FRD 50 FP1

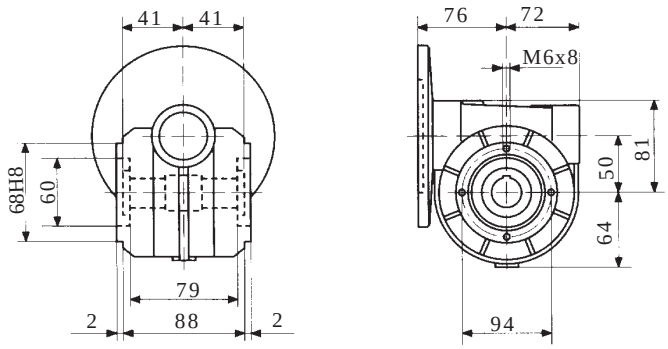

RD 50 FP1

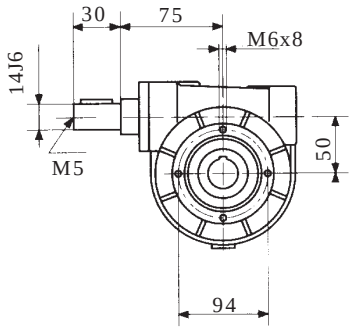

FRD 50 FP2

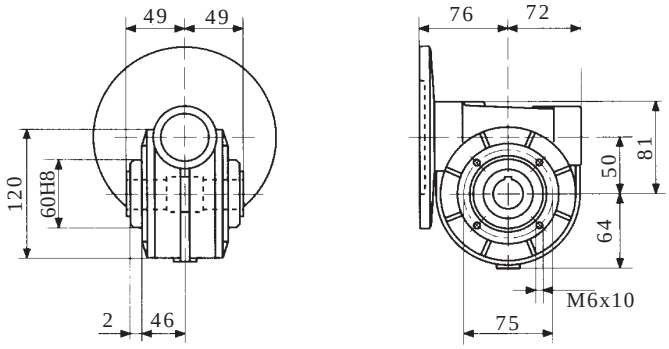

RD 50 FP2

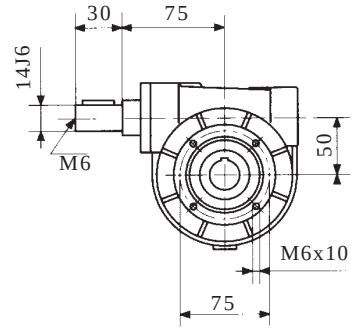

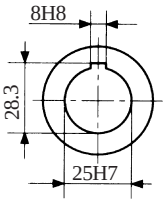

Standard Output Hollow Bore

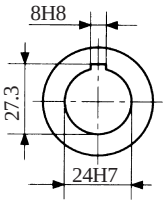

Optional Output Hollow Bore

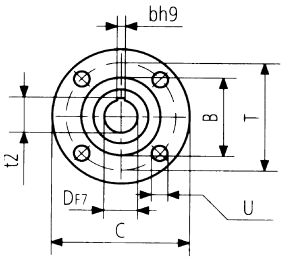

Motor Flange

Motor Flange Dimensions

	FP	C	B	T	U	DF7	bh9	t2 +0.1 0
B5	63	140	95	115	9.5	11	4	12.8
	71	160	110	130	9.5	14	5	16.3
	80	200	130	165	11.5	19	6	21.8
B14	63*	90	60	75	5.5	11	4	12.8
	71	105	70	85	7	14	5	16.3
	80	120	80	100	7	19	6	21.8

*See note on page 31.

FRD 63/A

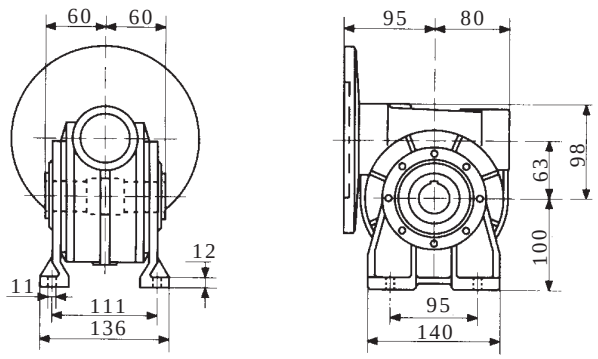

RD 63/A

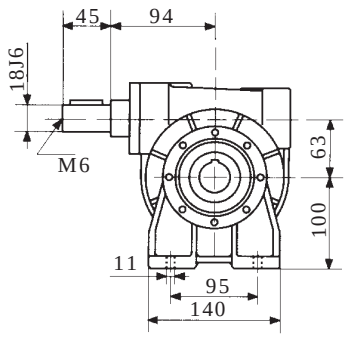

FRD 63/B

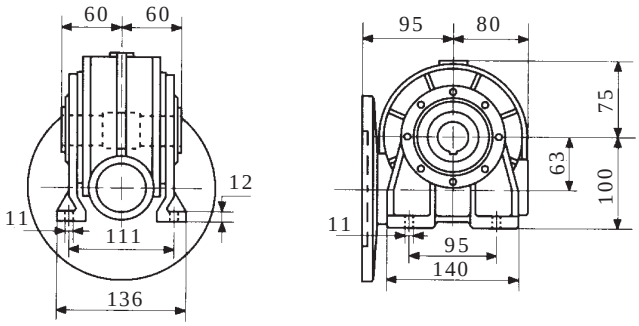

RD 63/B

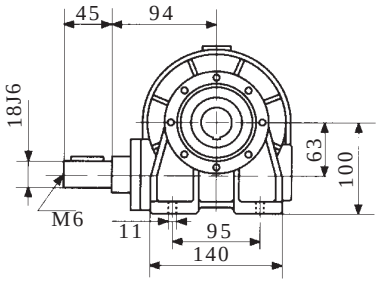

FRD 63/V

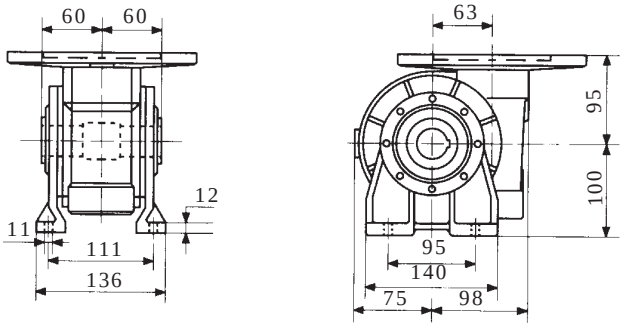

RD 63/V

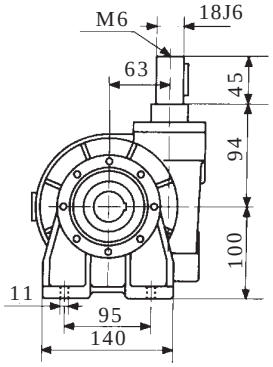

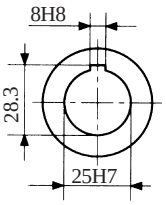

Standard Output
Hollow Bore

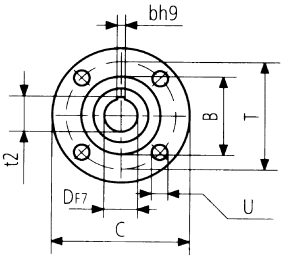

Motor Flange

Motor Flange Dimensions

	A - B - V	C	B	T	U	DF7	bh9	t2 +0.1 0
B5	70	160	110	130	9.5	14	5	16.3
	80	200	130	165	11.5	19	6	21.8
	90	200	130	165	11.5	24	8	27.3
B14	71*	105	70	85	7	14	5	16.3
	80	120	80	100	7	19	6	21.8
	90	140	95	115	8.5	24	8	27.3

*See note on Page 31.

FRD 63 FB

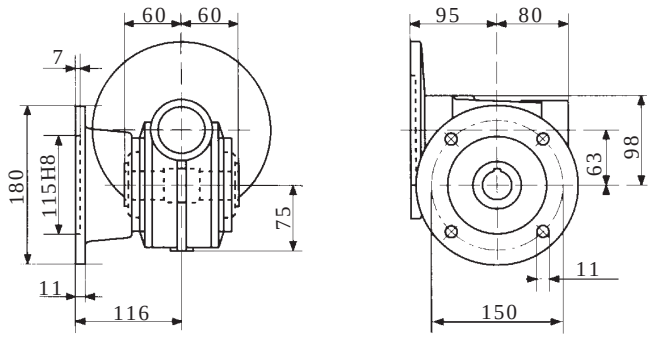

RD 63 FB

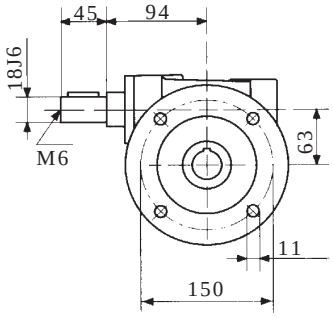

FRD 63 FB1

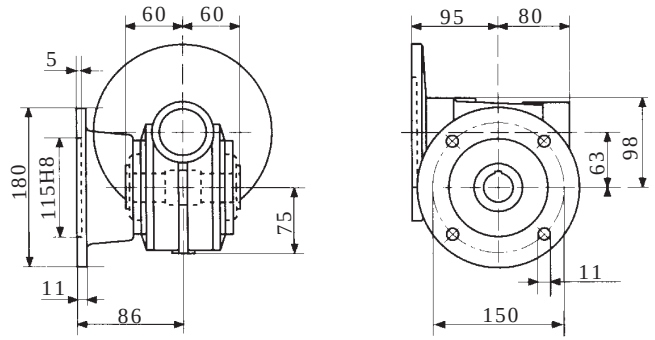

RD 63 FB1

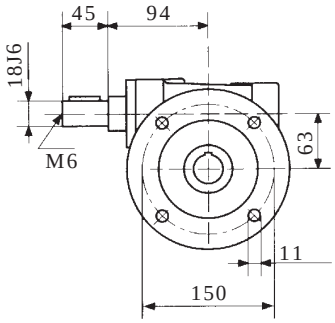

FRD 63 FB2

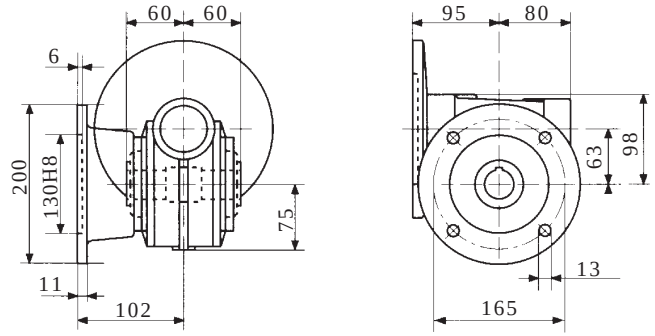

RD 63 FB2

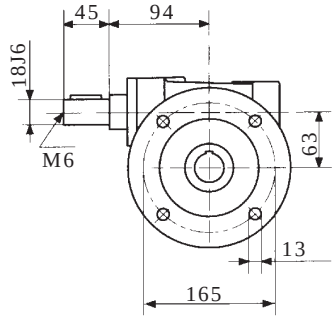

FRD 63 FB3

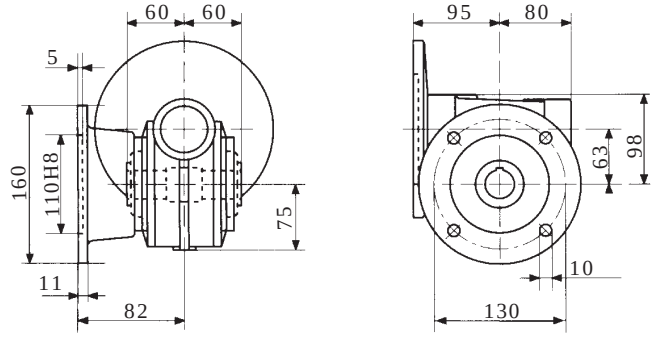

RD 63 FB3

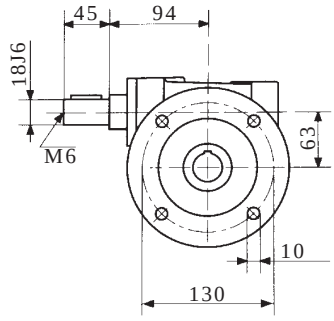

FRD 63 FP

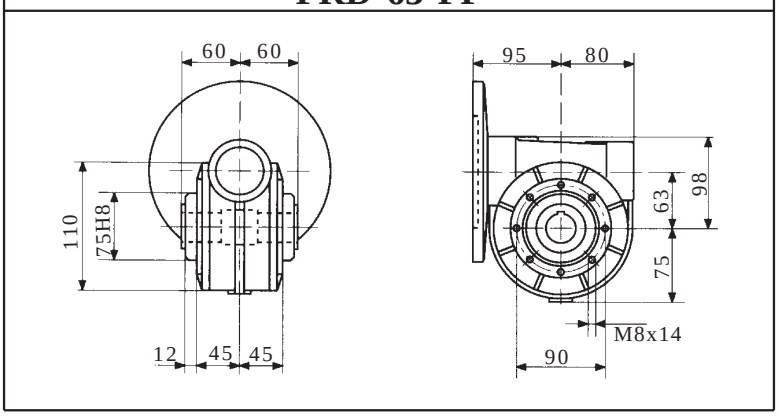

RD 63 FP

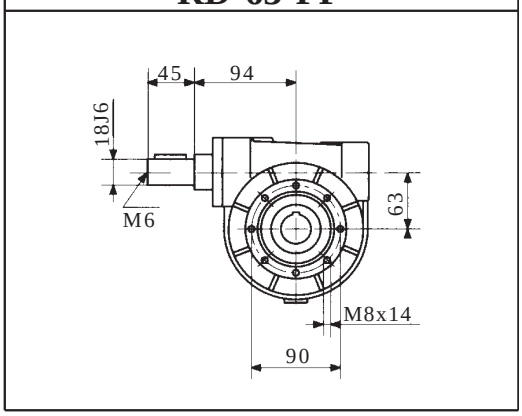

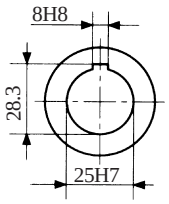

Standard Output Hollow Bore

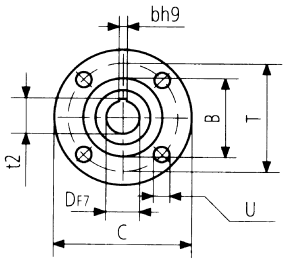

Motor Flange

Motor Flange Dimensions

	FB-FP	C	B	T	U	DF7	bh9	t2 +0,1
B5	71	160	110	130	9.5	14	5	16.3
	80	200	130	165	11.5	19	6	21.8
	90	200	130	165	11.5	24	8	27.3

B14	71*	105	70	85	7	14	5	16.3
	80	120	80	100	7	19	6	21.8
	90	140	95	115	8.5	24	8	27.3

*See note on page 31.

FRD 70/A

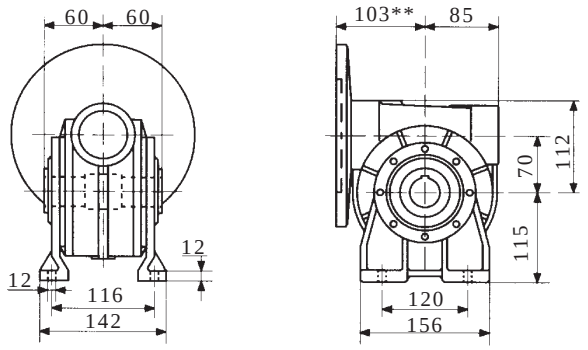

RD 70/A

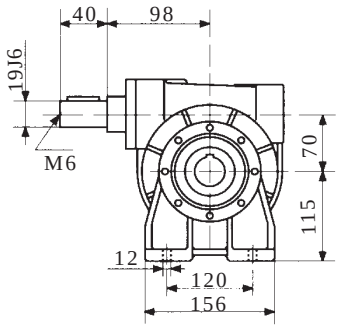

FRD 70/B

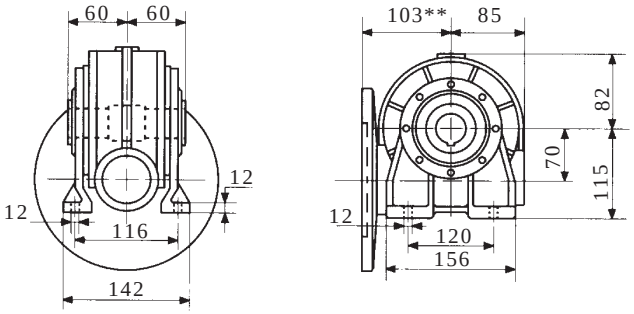

RD 70/B

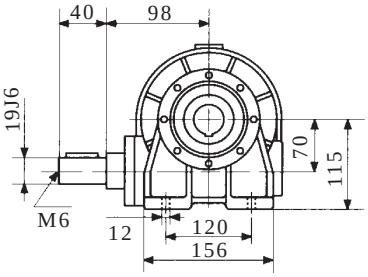

FRD 70/V

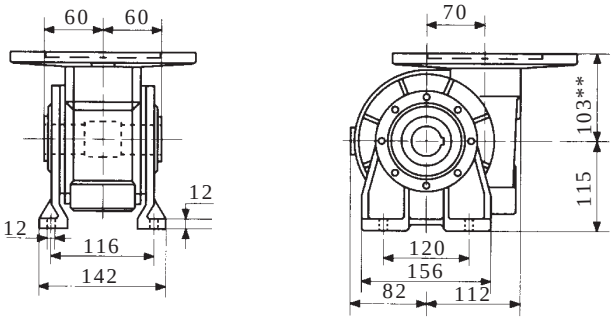

RD 70/V

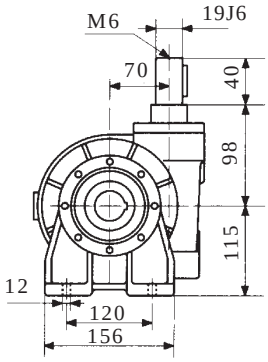

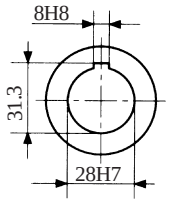

Standard Output Hollow Bore

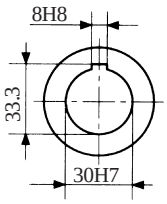

Optional Output Hollow Bore

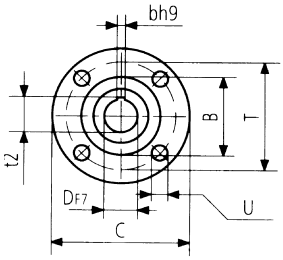

Motor Flange

Motor Flange Dimensions

	A - B - V	C	B	T	U	DF7	bh9	t2 ±0.1	
B5	71	160	110	130	9.5	14	5	16.3	
	80	200	130	165	11.5	19	6	21.8	
	90	200	130	165	11.5	24	8	27.3	
	100	250	180	215	14	28	8	31.3	**108
B14	80*	120	80	100	7	19	6	21.8	
	90	140	95	115	8.5	24	8	27.3	
	100	160	110	130	8.5	28	8	31.3	**108

*See note on page 31.

FRD 70 FB

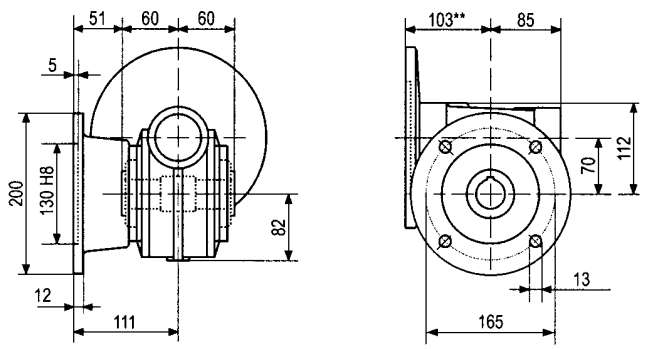

RD 70 FB

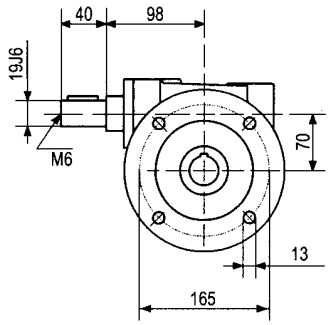

FRD 70 FB1

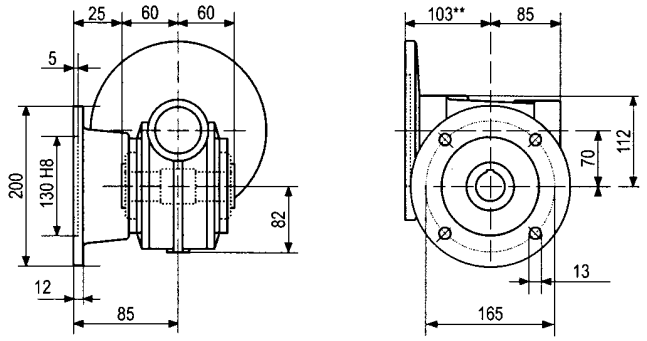

RD 70 FB1

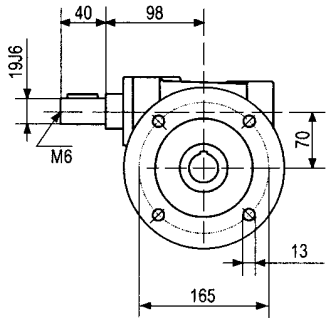

FRD 70 FB2

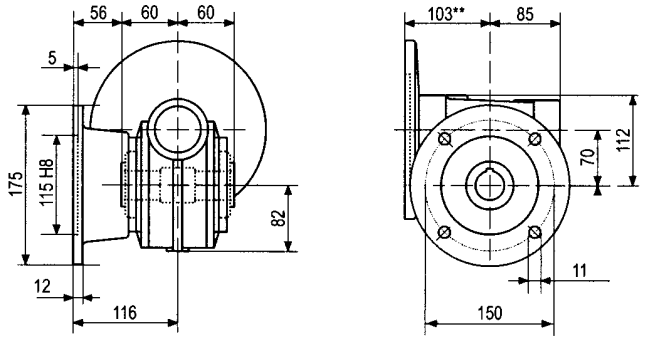

RD 70 FB2

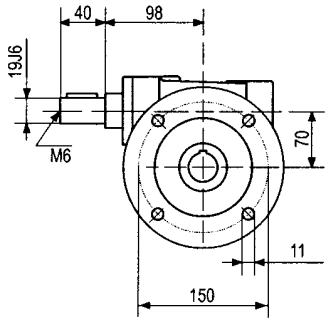

FRD 70 FB3

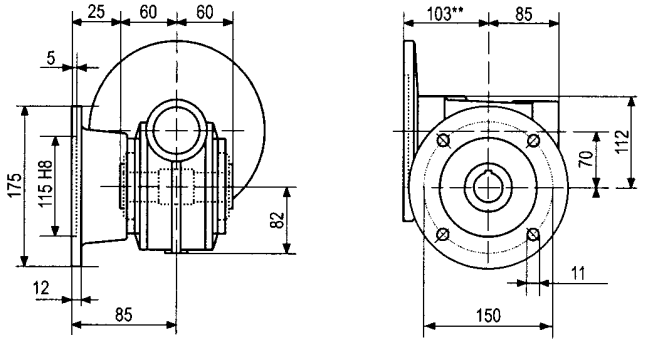

RD 70 FB3

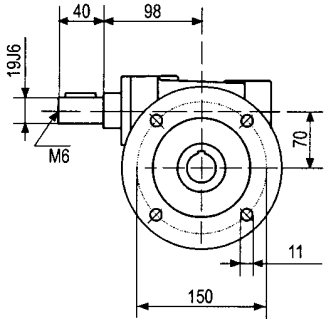

FRD 70 FB3A

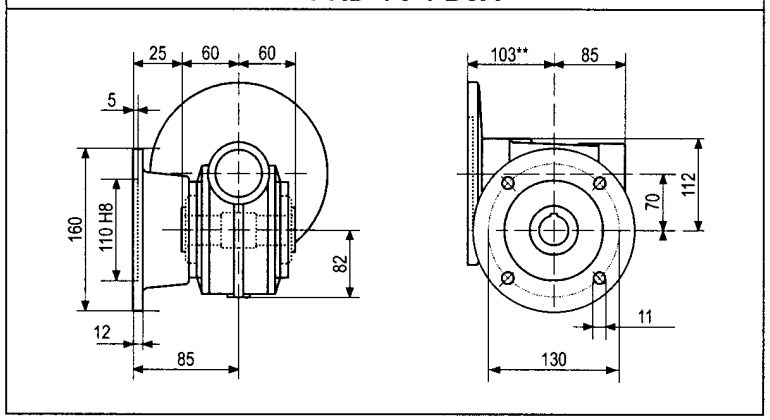

RD 70 FB3A

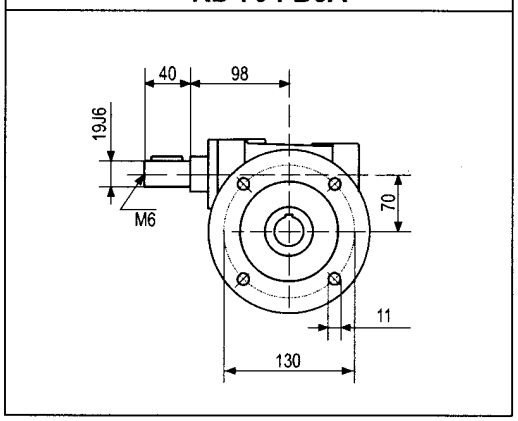

FRD 70 FB4

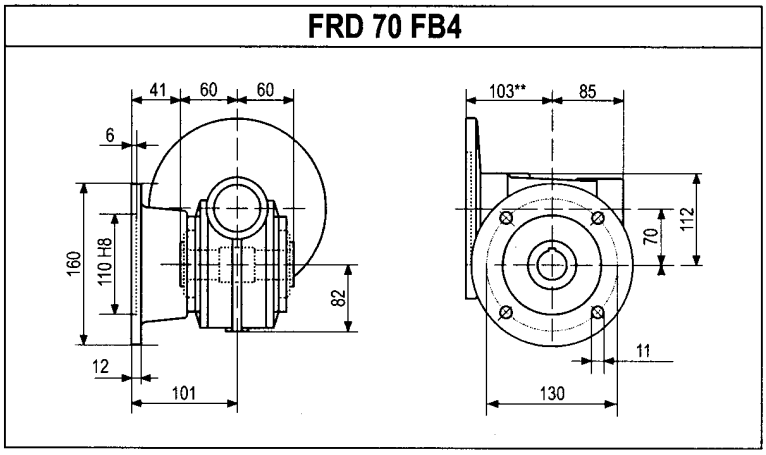

RD 70 FB4

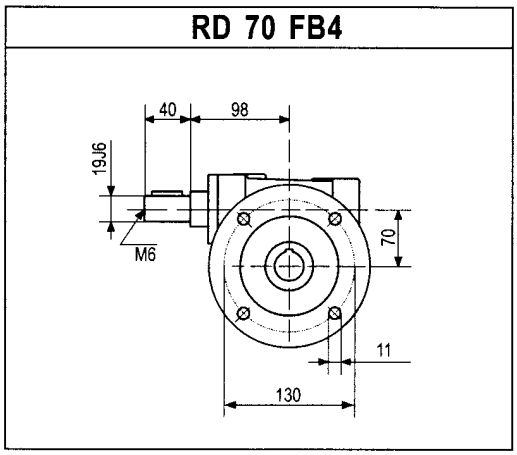

FRD 70 FP

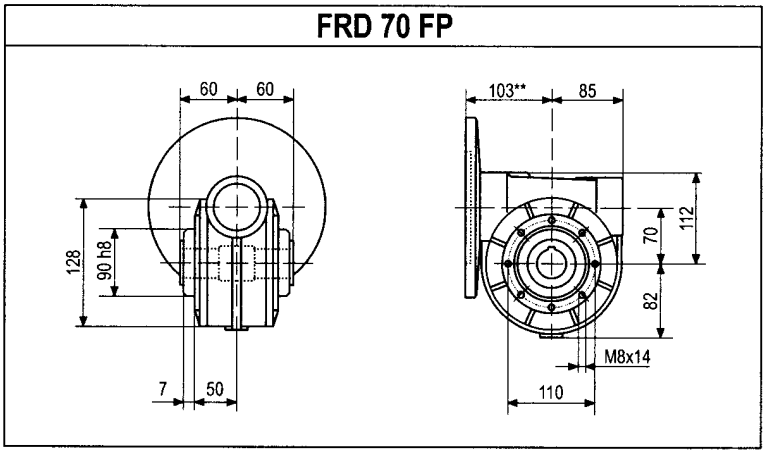

RD 70 FP

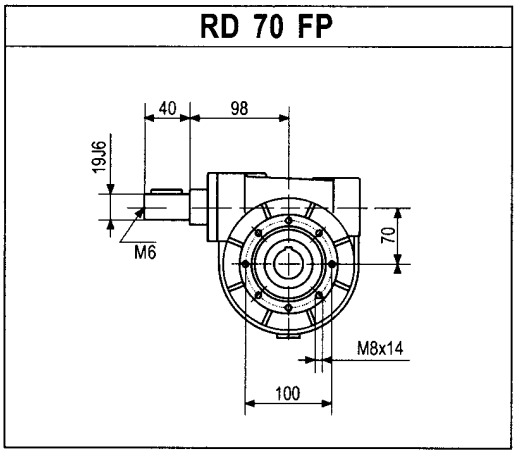

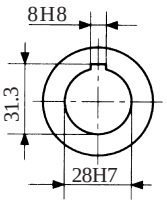

Standard Output Hollow Bore

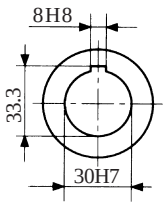

Optional Output Hollow Bore

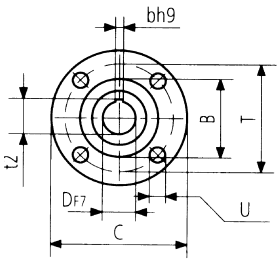

Motor Flange

Motor Flange Dimensions

	FB-FP	C	B	T	U	DF7	bH9	t2 +0,1	
B5	71	160	110	130	9.5	14	5	16.3	
	80	200	130	165	11.5	19	6	21.8	
	90	200	130	165	11.5	24	8	27.3	
	100	250	180	215	14	28	8	31.3	**108
B14	80*	120	80	100	7	19	6	21.8	
	90	140	95	115	8.5	24	8	27.3	
	100	160	110	130	8.5	28	8	31.3	**108

*See note on page 31.

FRD 85/A

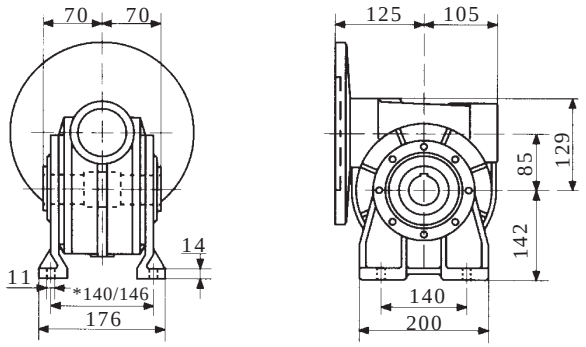

*Slot

RD 85/A

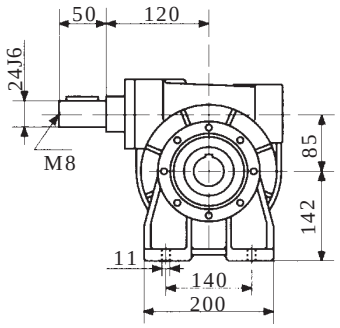

FRD 85/B

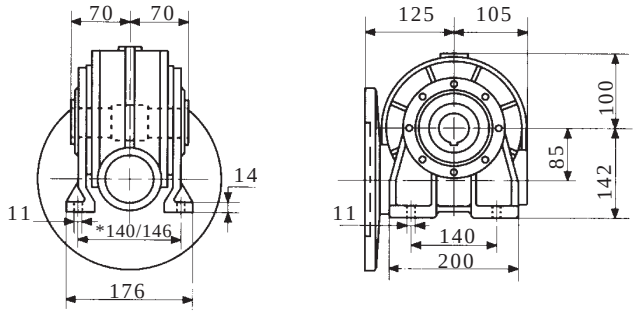

*Slot

RD 85/B

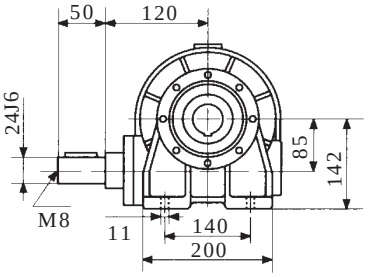

FRD 85/V

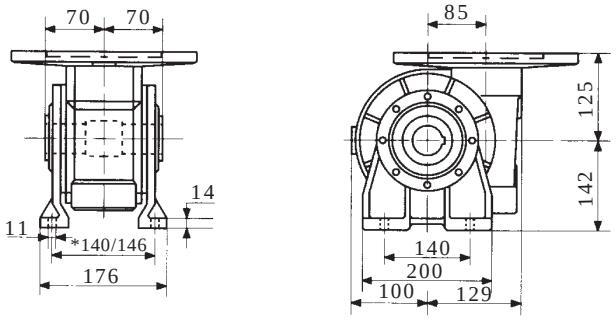

*Slot

RD 85/V

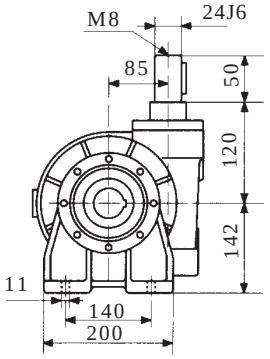

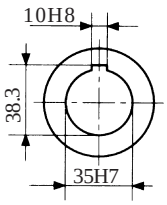

Standard Output Hollow Bore

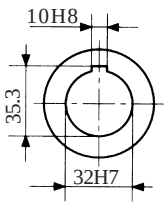

Optional Output Hollow Bore

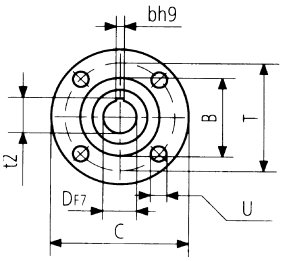

Motor Flange

Motor Flange Dimensions

	A - B - V	C	B	T	U	DF7	bh9	t2 +0.1 0
B5	71	160	110	130	9	14	5	16.3
	80	200	130	165	12	19	6	21.8
	90	200	130	165	12	24	8	27.3
	100	250	180	215	14	28	8	31.3
	112	250	180	215	14	28	8	31.3
B14	80*	120	80	100	7	19	6	21.8
	90	140	95	115	9	24	8	27.3
	100	160	110	130	9	28	8	31.3
	112	160	110	130	9	28	8	31.3

*See note on page 31.

FRD 85 FB

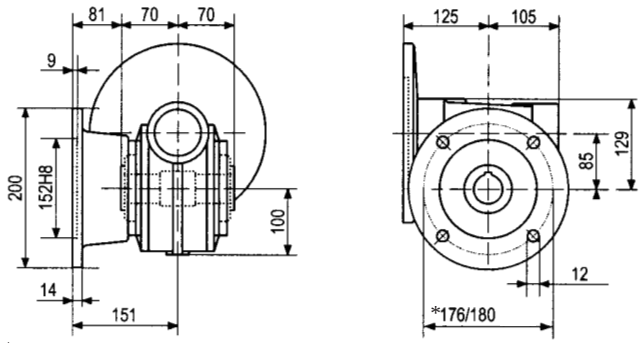

*Slot

RD 85 FB

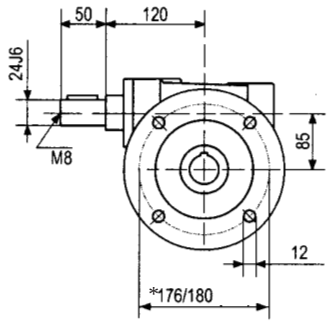

*Slot

FRD 85 FBA

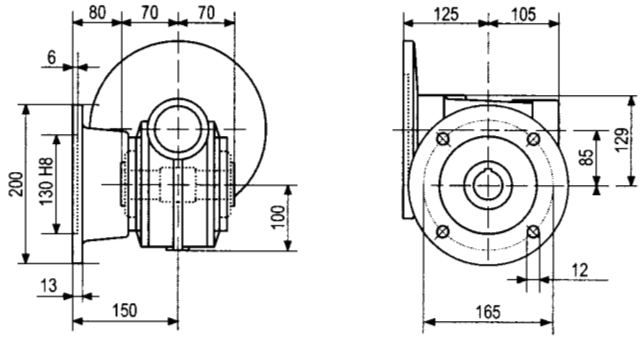

RD 85 FBA

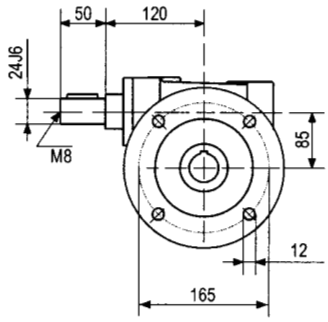

FRD 85 FB1

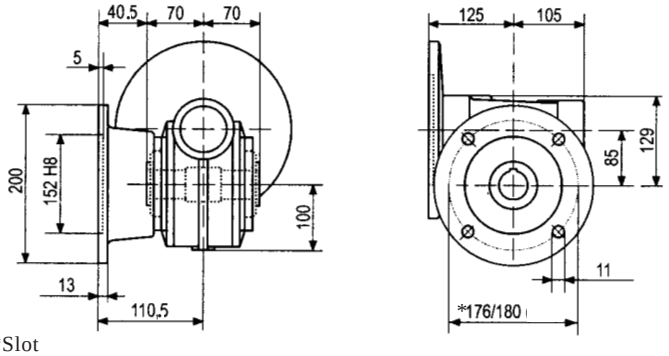

*Slot

RD 85 FB1

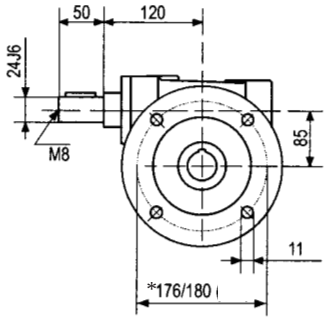

*Slot

FRD 85 FB1A

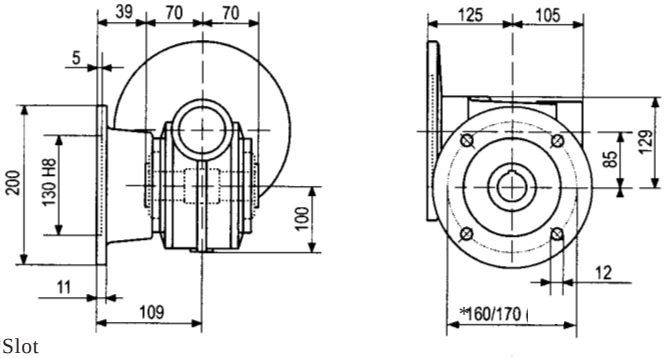

*Slot

RD 85 FB1A

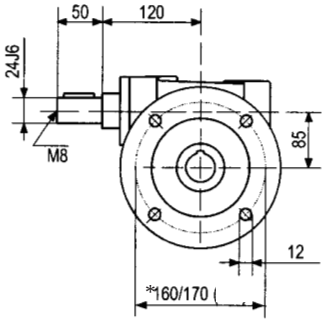

*Slot

FRD 85 FB2

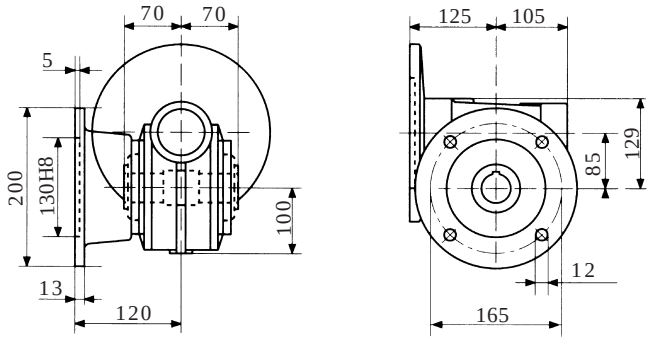

RD 85 FB2

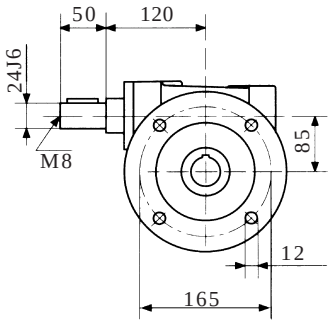

FRD 85 FP

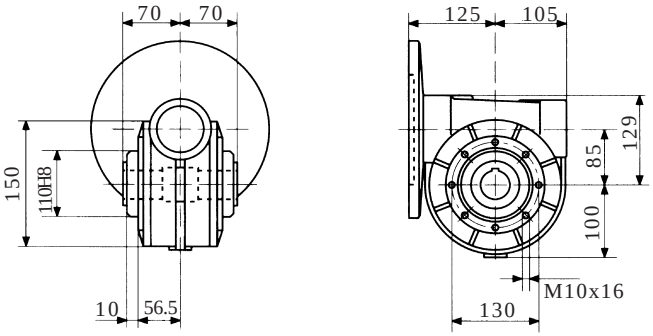

RD 85 FP

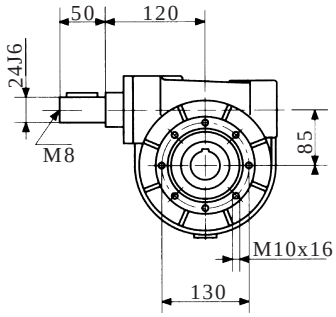

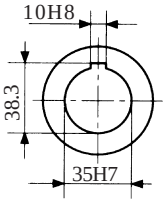

Standard Output Hollow Bore

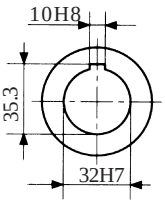

Optional Output Hollow Bore

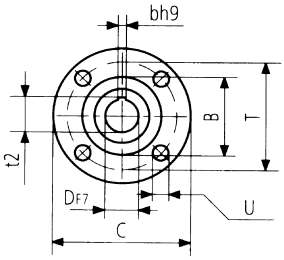

Motor Flange

Motor Flange Dimensions

	FB-FP	C	B	T	U	DF7	bh9	t2 +0.1 0
B5	71	160	110	130	9	14	5	16.3
	80	200	130	165	12	19	6	21.8
	90	200	130	165	12	24	8	27.3
	100	250	180	215	14	28	8	31.3
	112	250	180	215	14	28	8	31.3
B14	80*	120	80	100	7	19	6	21.8
	90	140	95	115	9	24	8	27.3
	100	160	110	130	9	28	8	31.3
	112	160	110	130	9	28	8	31.3

*See note on page 31.

Execution with Worm Projecting at Both Ends (on request)

*with PAM 28/$\frac{250}{160}$

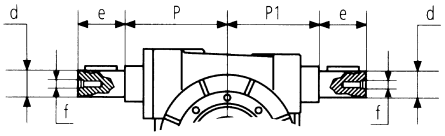

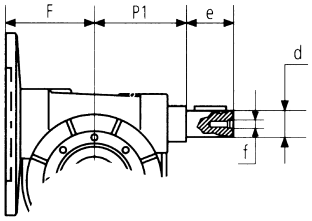

	dj6	e	f	P	P1	F	
30	9	20	M4	48	48	54	
40	11	22	M5	65	65	65	
50	14	30	M6	75	75	76	
63	18	45	M6	94	85	95	
70	19	40	M6	98	90	103	*108
85	24	50	M8	120	110	125	

Dimension of Tapped

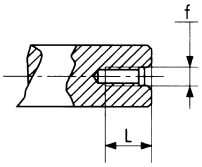

	worm		shaft	
	f	L	f	L
30	M4	12	M5	14
40	M5	14	M6	16
50	M6	16	M8	20
63	M6	16	M8	20
70	M6	16	M8	20
85	M8	20	M10	25

2.5 ACCESSORIES

Single Low-Speed Shaft

	d(h7)	A	S	f	L
30	14	30	3	M6	93
40	19	40	5	M8	125
40	18	40	5	M8	107
50	24	50	5	M8	150
50	25	60	5	M8	155
63	25	60	5	M8	182
70	28	60	10	M8	187
70	30	60	10	M8	187
85	35	60	5	M10	200

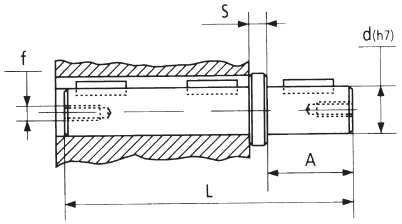

Double Low-Speed Shaft

	d(h7)	A	S	Ab1	f	L
30	14	30	2	31	M6	125
40	19	40	4	44	M8	170
40	18	40	4	44	M8	152
50	24	50	5	55	M8	208
50	25	60	5	65	M8	212
63	25	60	5	65	M8	250
70	28	60	5	65	M8	250
70	30	60	5	65	M8	250
85	35	60	5	65	M10	270

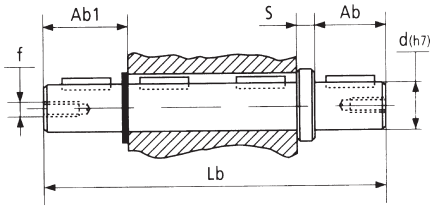

Torque Arm

	a	b	Lt	E	D_1	O	S_1	S	H
40	100	50	180	83	60	7	15	4	10
40*	100	50	180	65	50	7	15	4	10
50	100	55	190	85	70	9	15	4	10
50*	100	55	190	94	68	7	15	4	10
63	150	55	240	90	75	9	20	6	10
70	200	65	300	110	90	9	25	6	10
85	200	80	320	130	110	11	25	6	14

*By Request Only

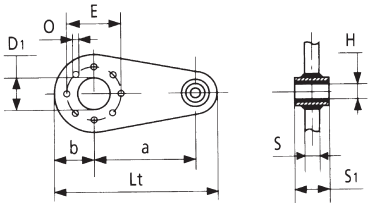

2.6 POSSIBLE SET-UPS

*The flanges in B14 have the motor connection holes arranged on the axes. Check the dimensions for proper motor assembly.

		B5 - B14						
	i	56	63	71	80	90	100	112
FRD 30	7.5÷80							
	100							
FRD 40	7.5÷50							
	40÷100	*						
FRD 50	7.5÷40							
	40÷80		*					
	100							
FRD 63	7÷35							
	40÷60			*				
	70÷100							
FRD 70	7÷15							
	20÷45				*			
	40÷80							
	100							
FRD 85	7÷35				*			
	40÷60							
	70÷100							

2.7 PERFORMANCE OF REDUCTION GEARS

RD 30						
i	n1	n2	M1	KW	HP	Rd
7.5	900	120	20.3	0.30	0.41	0.83
10		90	23.6	0.27	0.37	0.80
15		60	24.2	0.20	0.27	0.75
20		45	22.6	0.15	0.20	0.71
30		30	27.5	0.13	0.18	0.64
40		23	27.2	0.10	0.14	0.61
50		18	26.3	0.08	0.11	0.60
60		15	22.4	0.07	0.10	0.47
70		13	17.5	0.05	0.07	0.45

RD 30						
i	n1	n2	M1	KW	HP	Rd
7.5	1400	186	18	0.41	0.56	0.86
10		140	20	0.35	0.48	0.84
15		93	22	0.28	0.38	0.78
20		70	20	0.20	0.27	0.74
30		46	23	0.17	0.23	0.67
40		35	25	0.13	0.18	0.70
50		28	23	0.10	0.14	0.65
60		23	18	0.09	0.12	0.50
70		20	17	0.07	0.10	0.49
80		17	15	0.05	0.07	0.52
100		14	10	0.03	0.04	0.48

RD 30						
i	n1	n2	M1	KW	HP	Rd
7.5	2800	373	13.5	0.58	0.79	0.89
10		280	14	0.46	0.63	0.87
15		186	16.5	0.38	0.52	0.83
20		140	15.5	0.28	0.38	0.80
30		93	17.8	0.23	0.31	0.75
40		70	17.6	0.18	0.25	0.69
50		56	16.6	0.15	0.20	0.65
60		47	15	0.12	0.16	0.61
70		40	12.5	0.09	0.12	0.58
80		35	11.2	0.07	0.10	0.55
100		28	9.3	0.05	0.07	0.52

RD 40						
i	n1	n2	M1	KW	HP	Rd
7.5	900	120	51.3	0.75	1	0.86
10		90	39	0.54	0.7	0.83
15		60	56.6	0.45	0.6	0.79
20		45	47.1	0.30	0.4	0.74
30		30	59.3	0.27	0.36	0.69
40		23	60.2	0.23	0.3	0.63
50		18	64.4	0.20	0.27	0.60
60		15	50.8	0.14	0.19	0.56
70		13	48	0.12	0.16	0.54
80		11	41.6	0.10	0.13	0.50
100		9	35.8	0.08	0.10	0.45

RD 40						
i	n1	n2	M1	KW	HP	Rd
7.5	1400	186	41	0.95	1.23	0.88
10		140	35	0.60	0.82	0.85
15		93	44	0.52	0.71	0.82
20		70	38	0.35	0.48	0.78
30		46	48	0.32	0.44	0.72
40		35	45	0.25	0.34	0.65
50		28	46	0.22	0.30	0.60
60		23	41	0.17	0.23	0.58
70		20	34	0.14	0.19	0.50
80		17	31	0.12	0.16	0.48
100		14	32	0.10	0.14	0.45

RD 40						
i	n1	n2	M1	KW	HP	Rd
7.5	2800	373	29.3	1.30	1.7	0.90
10		280	24.5	0.83	1.1	0.87
15		186	29.3	0.70	0.9	0.85
20		140	29.4	0.50	0.7	0.82
30		93	35.9	0.43	0.6	0.78
40		70	30.7	0.33	0.4	0.75
50		56	37.7	0.30	0.41	0.72
60		47	31.3	0.23	0.3	0.68
70		40	23.3	0.18	0.2	0.65
80		35	24.1	0.14	0.19	0.62
100		28	22.9	0.12	0.16	0.56

RD 50						
i	n1	n2	M1	KW	HP	Rd
7.5	900	120	104.7	1.50	2.04	0.86
10		90	118.9	1.25	1.8	0.83
15		60	89.6	0.70	0.95	0.79
20		45	104.6	0.66	0.9	0.73
30		30	112.1	0.50	0.68	0.69
40		23	120.4	0.44	0.60	0.63
50		18	97.9	0.30	0.41	0.60
60		15	102.4	0.29	0.39	0.55
70		13	98.2	0.25	0.34	0.52
80		11	60.1	0.15	0.20	0.47
100		9	66.5	0.14	0.19	0.44

RD 50						
i	n1	n2	M1	KW	HP	Rd
7.5	1400	186	84	1.86	2.53	0.87
10		140	87	1.50	2.04	0.84
15		93	81	0.98	1.33	0.80
20		70	83	0.80	1.09	0.75
30		46	96	0.65	0.88	0.72
40		35	98	0.55	0.75	0.65
50		28	82	0.38	0.52	0.62
60		23	87	0.35	0.48	0.60
70		20	81	0.30	0.41	0.56
80		17	55	0.20	0.27	0.50
100		14	59	0.18	0.24	0.48

RD 50						
i	n1	n2	M1	KW	HP	Rd
7.5	2800	373	60.1	2.56	3.48	0.90
10		280	61.2	2	2.72	0.88
15		186	57.4	1.28	1.74	0.86
20		140	59.4	1.07	1.45	0.80
30		93	68.1	0.88	1.20	0.75
40		70	67.8	0.68	0.92	0.72
50		56	61.8	0.51	0.69	0.70
60		47	59.8	0.44	0.60	0.65
70		40	53.7	0.37	0.50	0.60
80		35	41.6	0.26	0.35	0.58
100		28	46.4	0.24	0.33	0.55

WORM SCREW REDUCTION GEARS AND MOTOR REDUCTION GEARS

RD 63						
i	n1	n2	M1	KW	HP	Rd
7	900	128	156	2.4	3.3	0.87
10		90	162	1.80	2.4	0.85
15		60	150	1.15	1.5	0.82
20		45	148	0.88	1.2	0.79
25		36	165	0.82	1.1	0.76
30		30	160	0.70	0.9	0.72
35		26	165	0.66	0.8	0.68
40		23	153	0.56	0.75	0.66
45		20	150	0.50	0.7	0.63
50		18	127	0.40	0.5	0.60
60		15	134	0.37	0.5	0.57
70		13	117	0.30	0.4	0.53
80		11	113	0.26	0.35	0.50
100		9	110	0.23	0.31	0.45

RD 63						
i	n1	n2	M1	KW	HP	Rd
7	1400	200	132	3.1	4.2	0.89
10		140	142	2.4	3.3	0.87
15		93	135	1.55	2.1	0.85
20		70	145	1.3	1.75	0.82
25		56	148	1.1	1.5	0.79
30		46	158	1	1.36	0.76
35		40	148	0.85	1.15	0.73
40		35	134	0.7	0.95	0.70
45		31	134	0.65	0.9	0.67
50		28	125	0.58	0.75	0.63
60		23	121	0.48	0.63	0.61
70		20	115	0.43	0.58	0.56
80		17	118	0.39	0.53	0.54
100		14	106	0.32	0.43	0.48

RD 63						
i	n1	n2	M1	KW	HP	Rd
7	2800	400	99	4.6	6.2	0.90
10		280	103	3.4	4.6	0.89
15		186	105	2.35	3.2	0.87
20		140	103	1.8	2.4	0.84
25		112	112	1.6	2.2	0.82
30		93	106	1.3	1.7	0.79
35		80	106	1.15	1.5	0.77
40		70	106	1.05	1.42	0.74
45		62	105	0.95	1.30	0.72
50		56	93	0.8	1.1	0.68
60		46	96	0.7	0.95	0.66
70		40	92	0.62	0.85	0.62
80		35	90	0.55	0.75	0.60
100		28	88	0.48	0.65	0.54

RD 70						
i	n1	n2	M1	KW	HP	Rd
7	900	128	188	2.9	3.9	0.87
10		90	219	2.4	3.3	0.86
15		60	225	1.7	2.3	0.83
20		45	221	1.3	1.75	0.80
25		36	225	1.1	1.5	0.77
30		30	229	1	1.36	0.72
35		26	219	0.85	1.15	0.70
40		23	209	0.75	1	0.67
45		20	202	0.65	0.90	0.65
50		18	197	0.60	0.82	0.62
60		15	188	0.50	0.68	0.59
70		13	178	0.44	0.60	0.55
80		11	172	0.38	0.52	0.52
100		9	146	0.30	0.40	0.46

RD 70						
i	n1	n2	M1	KW	HP	Rd
7	1400	200	149	3.5	4.7	0.89
10		140	162	2.7	3.7	0.88
15		93	177	2	2.7	0.86
20		70	181	1.6	2.2	0.83
25		56	191	1.4	1.9	0.80
30		46	197	1.25	1.7	0.76
35		40	194	1.1	1.5	0.74
40		35	184	0.95	1.3	0.71
45		31	170	0.80	1.1	0.69
50		28	169	0.75	1	0.66
60		23	167	0.65	0.90	0.62
70		20	158	0.57	0.77	0.58
80		17	154	0.50	0.68	0.55
100		14	127	0.38	0.50	0.49

RD 70						
i	n1	n2	M1	KW	HP	Rd
7	2800	400	123	5.75	7.8	0.90
10		280	137	4.5	6.1	0.89
15		186	152	3.4	4.6	0.87
20		140	145	2.5	3.4	0.85
25		112	154	1.8	2.5	0.83
30		93	146	1.8	2.5	0.79
35		80	143	1.55	2.1	0.77
40		70	153	1.5	2	0.75
45		62	146	1.3	1.77	0.73
50		56	141	1.15	1.56	0.72
60		46	134	0.95	1.3	0.68
70		40	130	0.85	1.15	0.64
80		35	125	0.75	1	0.61
100		28	122	0.65	0.9	0.55

RD 85						
i	n1	n2	M1	KW	HP	Rd
7	900	128	276	4.25	5.78	0.87
10		90	292	3.2	4.35	0.86
15		60	337	2.55	3.47	0.83
20		45	306	1.8	2.45	0.80
25		36	331	1.6	2.2	0.78
30		30	367	1.6	2.2	0.72
35		26	339	1.3	1.8	0.71
40		23	349	1.2	1.6	0.70
45		20	357	1.1	1.5	0.68
50		18	362	1.05	1.4	0.65
60		15	325	0.81	1.1	0.63
70		13	308	0.7	0.95	0.60
80		11	281	0.6	0.82	0.54
100		9	254	0.5	0.68	0.48

RD 85						
i	n1	n2	M1	KW	HP	Rd
7	1400	200	245	5.75	7.8	0.89
10		140	270	4.5	6.12	0.88
15		93	296	3.35	4.6	0.86
20		70	287	2.5	3.4	0.84
25		56	304	2.2	3	0.81
30		46	352	2.2	3	0.77
35		40	322	1.8	2.45	0.75
40		35	339	1.7	2.3	0.73
45		31	306	1.40	1.9	0.71
50		28	294	1.25	1.7	0.69
60		23	292	1.05	1.4	0.67
70		20	281	0.92	1.2	0.64
80		17	296	0.85	1.1	0.62
100		14	257	0.70	0.9	0.54

RD 85						
i	n1	n2	M1	KW	HP	Rd
7	2800	400	185	8.6	11.7	0.90
10		280	199	6.55	8.9	0.89
15		186	221	4.95	6.7	0.87
20		140	205	3.5	4.75	0.86
25		112	229	3.2	4.35	0.84
30		93	247	3	4.1	0.80
35		80	255	2.7	3.7	0.79
40		70	273	2.6	3.5	0.77
45		62	236	2.04	2.8	0.75
50		56	227	1.8	2.45	0.74
60		46	209	1.4	1.9	0.72
70		40	214	1.3	1.8	0.69
80		35	192	1.05	1.4	0.67
100		28	174	0.85	1.15	0.60

2.8 PERFORMANCE OF MOTOR REDUCTION GEARS

KW 0.09				HP 0.12		
i	n1	n2	M1'	FG	FRD	iEC
15	2800	186	4	4.2	**30**	**56**
20		140	5	3.1	"	"
30		93	7	2.5	"	"
40		70	8	2	"	"
50		56	10	1.67	"	"
30		93	7	4.7	**40**	"
40		70	9	3.7	"	"
50		56	11	3.3	"	"
60		46	13	2.5	"	"
7.5	1400	186	4	4.5	**30**	"
10		140	5	3.9	"	"
15		93	7	3.1	"	"
20		70	9	2.2	"	"
30		46	12	1.9	"	"
40		35	17	1.45	"	"
50		28	20	1.10	"	"
60		23	19	1	"	"
70		20	21	0.8	"	"
80		17	26	0.6	"	"
100		14	29	0.33	"	"
40		35	16	2.7	**40**	"
50		28	18	2.4	"	"
60		23	22	1.9	"	"
70		20	22	1.5	"	"
80		17	24	1.3	"	"
100		14	28	1.1	"	"
7.5	900	120	6	3.3	**30**	**63**
10		90	8	3	"	"
15		60	11	2.2	"	"
20		45	13	1.7	"	"
30		30	18	1.4	"	"
20		45	14	3.3	**40**	"
30		30	20	3	"	"
40		23	24	2.5	"	"
50		18	29	2.2	"	"
60		15	32	1.5	"	"
70		13	36	1.3	"	"
80		11	39	1.1	"	"
50		18	29	3.3	**50**	"
60		15	31	3.2	"	"
70		13	34	2.8	"	"
80		11	37	1.7	"	"
100		9	42	1.5	"	"

KW 0.12				HP 0.18		
i	n1	n2	M1'	FG	FRD	iEC
7.5	2800	373	3	4.8	**30**	**56**
10		280	4	3.8	"	"
15		186	5	3.17	"	"
20		140	7	2.3	"	"
30		93	9	1.9	"	"
40		70	11	1.5	"	"
40		70	12	2.7	**40**	"
50		56	15	2.5	"	"
60		47	16	1.92	"	"
70		40	18	1.5	"	"
7.5	2800	186	5	3.4	**30**	**63**
10		140	7	2.9	"	"
15		93	10	2.3	"	"
20		70	12	1.7	"	"
30		46	17	1.4	"	"
40		35	23	1.1	"	"
50		28	26	0.9	"	"
60		23	25	0.75	"	"
20		70	13	2.9	**40**	**63**
30		46	18	2.7	"	"
40		35	21	2.1	"	"
50		28	24	1.8	"	"
60		23	29	1.4	"	"
70		20	29	1.2	"	"
80		17	31	1	"	"
50		28	25	3.2	**50**	"
60		23	30	2.9	"	"
70		20	32	2.5	"	"
80		17	34	1.67	"	"
100		14	39	1.5	"	"
7.5	900	120	8	2.5	**30**	"
10		90	10	2.2	"	"
15		60	14	1.7	"	"
20		45	18	1.25	"	"
30		30	24	1	"	"
15		60	15	3.75	**40**	"
20		45	19	2.5	"	"
30		30	26	2.2	"	"
40		23	31	1.9	"	"
50		18	38	1.7	"	"
60		15	43	1.17	"	"
80		11	49	1.25	**50**	"
100		9	56	1.17	"	"

KW 0.18				HP 0.25		
i	n1	n2	M1'	FG	FRD	iEC
7.5	2800	373	4	3.2	**30**	**63**
10		280	5	2.5	"	"
15		186	8	2.1	"	"
20		140	10	1.5	"	"
30		93	14	1.3	"	"
40		70	17	1	"	"
15		186	8	3.9	**40**	"
20		140	10	2.8	"	"
30		93	14	2.4	"	"
40		70	18	1.8	"	"
50		56	22	1.7	"	"
60		47	25	1.3	"	"
70		40	28	1	"	"
60		47	24	2.4	**50**	"
70		40	26	2.1	"	"
7.5	1400	186	8	2.3	**30**	**63**
10		140	10	1.9	"	"
15		93	15	1.5	"	"
20		70	18	1.1	"	"
30		47	25	1	"	"
15		93	15	2.9	**40**	"
20		70	19	2	"	"
30		47	26	1.8	"	"
40		35	33	1.4	"	"
50		28	37	1.2	"	"
60		23	43	1	"	"
40		35	32	3	**50**	"
50		28	38	2.1	"	"
60		23	45	1.9	"	"
70		20	48	1.7	"	"
80		17	49	1.1	"	"
100		14	59	1	"	"
15	900	60	22	2.5	**40**	**71**
20		45	28	1.7	"	"
30		30	39	1.5	"	"
40		23	47	1.3	"	"
50		18	57	1.1	"	"
40		23	47	2.4	**50**	"
50		18	57	1.7	"	"
60		15	63	1.6	"	"
70		13	69	1.4	"	"
40		23	49	3.1	**63**	"
45		20	54	2.8	"	"
50		18	57	2.2	"	"
60		15	65	2.1	"	"
70		13	70	1.7	"	"
80		11	78	1.4	"	"
100		9	86	1.3	"	"
50		18	59	3.3	**70**	"
60		15	68	2.8	"	"
70		13	73	2.4	"	"
80		11	81	2.1	"	"
100		9	88	1.7	"	"
80		11	84	3.3	**85**	"
100		9	92	2.8	"	"

WORM SCREW REDUCTION GEARS AND MOTOR REDUCTION GEARS

KW 0.25				HP 0.35		
i	n1	n2	M1'	FG	FRD	iEC
7.5	2800	373	6	2.3	**30**	**63**
10		280	7	1.85	"	"
15		186	11	1.5	"	"
20		140	14	1.12	"	"
30		93	19	0.9	"	"
10		280	8	3.3	**40**	"
15		186	11	2.8	"	"
20		140	14	2	"	"
30		93	20	1.7	"	"
40		70	25	1.3	"	"
50		56	30	1.2	"	"
60		47	34	0.9	"	"
40		70	24	2.7	**50**	"
50		56	30	2.1	"	"
60		47	34	1.8	"	"
70		40	36	1.5	"	"
7.5	1400	186	11	3.8	**40**	**71**
10		140	14	2.4	"	"
15		93	21	2.1	"	"
20		70	27	1.4	"	"
30		47	36	1.3	"	"
40		35	44	1	"	"
50		28	51	0.9	"	"
15		93	20	3.9	**50**	"
20		70	25	3.2	"	"
30		47	36	2.6	"	"
40		35	44	2.2	"	"
50		28	53	1.5	"	"
60		23	62	1.4	"	"
70		20	67	1.2	"	"
35		40	44	3.4	**63**	"
40		35	48	2.8	"	"
45		31	52	2.6	"	"
50		28	54	2.3	"	"
60		23	63	1.9	"	"
70		20	67	1.7	"	"
80		17	76	1.6	"	"
100		14	82	1.3	"	"
45		31	53	3.2	**70**	"
50		28	56	3	"	"
60		23	64	2.6	"	"
70		20	69	2.3	"	"
80		17	77	2	"	"
100		14	84	1.5	"	"
80		17	87	3.4	**85**	"
100		14	92	2.8	"	"
7.5	900	120	17	3	**40**	"
10		90	22	2.2	"	"
15		60	31	1.8	"	"
20		45	39	1.2	"	"
30		30	55	1.1	"	"
40		23	65	0.9	"	"
15		60	31	2.8	**50**	"
20		45	38	2.6	"	"
30		30	56	2	"	"
40		23	65	1.8	"	"
50		18	79	1.2	"	"
60		15	87	1.2	"	"
70		13	95	1	"	"
30		30	57	2.8	**63**	"
35		26	63	2.6	"	"
40		23	68	2.2	"	"
45		20	75	2	"	"
50		18	79	1.6	"	"
60		15	91	1.5	"	"
70		13	97	1.2	"	"

KW 0.25				HP 0.35		
i	n1	n2	M1'	FG	FRD	iEC
80	900	11	108	1	**63**	**71**
100		9	119	0.9	"	"
45		20	78	2.6	**70**	"
50		18	82	2.4	"	"
60		15	94	2	"	"
70		13	101	1.8	"	"
80		11	113	1.5	"	"
100		9	122	1.2	"	"
80		11	117	2.4	**85**	"
100		9	127	2	"	"

KW 0.37				HP 0.50		
i	n1	n2	M1'	FG	FRD	iEC
7.5	2800	373	9	3.5	**40**	**71**
10		280	11	2.2	"	"
15		186	16	1.9	"	"
20		140	21	1.35	"	"
30		93	29	1.2	"	"
40		70	38	0.9	"	"
20		140	20	2.9	**50**	"
30		93	28	2.4	"	"
40		70	36	1.8	"	"
50		56	44	1.4	"	"
60		47	49	1.2	"	"
20		140	21	4.8	**63**	"
25		112	26	4.3	"	"
30		93	30	3.5	"	"
35		80	34	3.1	"	"
40		70	37	2.8	"	"
7.5	1400	186	16	2.6	**40**	**71**
10		140	21	1.6	"	"
15		93	31	1.4	"	"
20		70	39	0.95	"	"
10		140	21	4	**50**	"
15		93	30	2.6	"	"
20		70	38	2.2	"	"
30		46	55	1.75	"	"
40		35	65	1.5	"	"
50		28	78	1.05	"	"
60		23	92	0.95	"	"
20		70	42	3.5	**63**	"
25		56	50	3	"	"
30		46	58	2.7	"	"
35		40	65	2.3	"	"
40		35	71	1.9	"	"
45		31	76	1.7	"	"
50		28	79	1.6	"	"
60		23	94	1.3	"	"
70		20	99	1.2	"	"
80		17	112	1.1	"	"
100		14	121	0.85	"	"
45		31	79	2.2	**70**	"
50		28	83	2	"	"
60		23	95	1.7	"	"
70		20	102	1.5	"	"
80		17	114	1.3	"	"
100		14	124	1	"	"
50		28	87	3.4	**85**	"
60		23	103	2.8	"	"
70		20	113	2.5	"	"
80		17	129	2.3	"	"
100		14	136	1.9	"	"

KW 0.37				HP 0.50		
i	n1	n2	M1'	FG	FRD	iEC
10	900	90	32	3.3	**50**	**80**
15		60	46	1.9	"	"
20		45	62	2.4	**63**	"
25		36	75	2.2	"	"
30		30	85	1.9	"	"
35		26	92	1.8	"	"
40		23	101	1.5	"	"
45		20	111	1.3	"	"
50		18	118	1.1	"	"
60		15	134	1	"	"
25		36	76	3	**70**	"
30		30	85	2.7	"	"
35		26	95	2.3	"	"
40		23	103	2	"	"
45		20	115	1.7	"	"
50		18	122	1.6	"	"
60		15	139	1.35	"	"
70		13	150	1.2	"	"
80		11	167	1	"	"
50		18	127	2.8	**85**	"
60		15	148	2.2	"	"
70		13	163	1.9	"	"
80		11	173	1.6	"	"
100		9	188	1.35	"	"

KW 0.55				HP 0.75		
i	n1	n2	M1'	FG	FRD	iEC
7.5	2800	373	13	2.36	**40**	**71**
10		280	16	1.5	"	"
15		186	24	1.3	"	"
20		140	31	0.9	"	"
10		280	17	3.6	**50**	"
15		186	25	2.3	"	"
20		140	31	1.9	"	"
30		93	42	1.6	"	"
40		70	54	1.2	"	"
20		140	32	3.2	**63**	"
25		112	39	2.9	"	"
30		93	45	2.3	"	"
35		80	51	2.1	"	"
40		70	56	1.9	"	"
45		62	61	1.7	"	"
50		56	64	1.4	"	"
60		46	75	1.3	"	"
25		112	39	3.2	**70**	"
30		93	45	3.2	"	"
35		80	51	2.8	"	"
40		70	57	2.7	"	"
45		62	62	2.3	"	"
50		56	68	2.1	"	"
60		46	78	1.7	"	"
70		40	84	1.5	"	"
60		46	82	2.5	**85**	"
70		40	91	2.4	"	"
7.5	1400	186	25	3.4	**50**	**80**
10		140	32	2.7	"	"
15		93	45	1.8	"	"
20		70	56	1.5	"	"
30		46	80	1.2	"	"
40		35	98	1	"	"
15		93	48	2.8	**63**	"
20		70	62	2.4	"	"

WORM SCREW REDUCTION GEARS AND MOTOR REDUCTION GEARS

KW 0.55				HP 0.75		
i	n1	n2	M1'	FG	FRD	iEC
25	1400	56	74	2	**63**	**80**
30		46	87	1.8	"	"
35		40	96	1.5	"	"
40		35	105	1.3	"	"
45		31	113	1.2	"	"
50		28	118	1.05	"	"
20		70	62	2.9	**70**	"
25		56	75	2.5	"	"
30		46	88	2.3	"	"
35		40	97	2	"	"
40		35	107	1.7	"	"
45		31	117	1.4	"	"
50		28	123	1.3	"	"
60		23	142	1.2	"	"
70		20	152	1	"	"
80		17	170	0.9	"	"
40		35	110	3.1	**85**	"
45		31	120	2.5	"	"
50		28	129	2.3	"	"
60		23	153	1.9	"	"
70		20	168	1.7	"	"
80		17	192	1.5	"	"
100		14	202	1.3	"	"
10	900	90	50	2.3	**50**	"
15		60	72	1.3	"	"
20		45	92	1.2	"	"
30		30	125	0.9	"	"
20		45	93	1.6	**63**	"
25		36	111	1.5	"	"
30		30	126	1.3	"	"
35		26	138	1.2	"	"
40		23	151	1	"	"
45		20	165	0.9	"	"
25		36	112	2	**70**	"
30		30	126	1.8	"	"
35		26	141	1.5	"	"
40		23	153	1.4	"	"
45		20	171	1.2	"	"
50		18	181	1.1	"	"
60		15	206	0.9	"	"
20		45	94	3.3	**85**	"
25		36	114	2.9	"	"
30		30	126	2.9	"	"
35		26	143	2.4	"	"
40		23	160	2.2	"	"
45		20	178	2	"	"
50		18	190	1.9	"	"
60		15	220	1.5	"	"
70		13	242	1.3	"	"
80		11	258	1.1	"	"
100		9	280	0.9	"	"

KW 0.75				HP 1.00		
i	n1	n2	M1'	FG	FRD	iEC
7.5	2800	373	17	3.4	**50**	**80**
10		280	23	2.7	"	"
15		186	33	1.7	"	"
20		140	41	1.4	"	"
30		93	58	1.2	"	"
40		70	74	0.9	"	"
15		186	34	3.1	**63**	"
20		140	43	2.4	"	"
25		112	53	2.1	"	"
30		93	61	1.7	"	"

KW 0.75				HP 1.00		
i	n1	n2	M1'	FG	FRD	iEC
35	2800	80	69	1.5	**63**	**80**
40		70	76	1.4	"	"
45		62	83	1.3	"	"
50		56	87	1.1	"	"
25		112	53	2.4	**70**	"
30		93	61	2.4	"	"
35		80	69	2.1	"	"
40		70	77	2	"	"
45		62	84	1.7	"	"
50		56	92	1.5	"	"
60		46	106	1.3	"	"
70		40	115	1.1	"	"
50		56	95	2.4	**85**	"
60		46	112	1.9	"	"
70		40	124	1.7	"	"
80		35	137	1.4	"	"
7.5	1400	186	34	2.5	**50**	"
10		140	43	2	"	"
15		93	62	1.3	"	"
20		70	77	1	"	"
10		140	45	3.2	**63**	"
15		93	65	2.1	"	"
20		70	84	1.7	"	"
25		56	101	1.5	"	"
30		46	118	1.3	"	"
35		40	130	1.1	"	"
40		35	143	1	"	"
45		31	155	0.9	"	"
15		93	66	2.7	**70**	"
20		70	85	2.1	"	"
25		56	102	1.8	"	"
30		46	118	1.6	"	"
35		40	133	1.5	"	"
40		35	145	1.3	"	"
45		31	159	1.1	"	"
50		28	169	1	"	"
60		23	193	0.9	"	"
20		70	86	3.3	**85**	"
25		56	104	2.9	"	"
30		46	120	2.9	"	"
35		40	134	2.4	"	"
40		35	149	2.3	"	"
45		31	164	1.9	"	"
50		28	176	1.7	"	"
60		23	209	1.4	"	"
70		20	229	1.2	"	"
80		17	261	1.1	"	"
100		14	276	0.9	"	"
10	900	90	67	2.4	**63**	**90**
15		60	98	1.5	"	"
20		45	125	1.2	"	"
25		36	151	1.1	"	"
30		30	172	0.9	"	"
15		60	99	2.3	**70**	"
20		45	127	1.7	"	"
25		36	153	1.5	"	"
30		30	172	1.3	"	"
35		26	193	1.1	"	"
40		23	209	1	"	"
20		45	128	2.4	**85**	"
25		36	155	2.1	"	"
30		30	172	2.1	"	"
35		26	195	1.7	"	"
40		23	218	1.6	"	"
45		20	243	1.5	"	"
50		18	259	1.4	"	"

KW 1.1				HP 1.5		
i	n1	n2	M1'	FG	FRD	iEC
7.5	2800	373	25	2.3	**50**	**80**
10		280	33	1.8	"	"
15		186	48	1.2	"	"
20		140	60	1	"	"
10		280	34	3.1	**63**	"
15		186	49	2.1	"	"
20		140	63	1.6	"	"
25		112	77	1.5	"	"
30		93	89	1.2	"	"
35		80	101	1.1	"	"
40		70	111	1	"	"
15		186	49	3.1	**70**	"
20		140	64	2.3	"	"
25		112	78	1.6	"	"
30		93	90	1.6	"	"
35		80	102	1.4	"	"
40		70	113	1.4	"	"
45		62	124	1.2	"	"
50		56	135	1.05	"	"
20		140	65	3.2	**85**	"
25		112	79	2.9	"	"
30		93	91	2.7	"	"
35		80	104	2.5	"	"
40		70	116	2.4	"	"
45		62	127	1.8	"	"
50		56	139	1.6	"	"
60		46	165	1.3	"	"
7	1400	200	47	2.8	**63**	**90**
10		140	65	2.2	"	"
15		93	96	1.4	"	"
20		70	123	1.2	"	"
25		56	148	1	"	"
7		200	47	3.2	**70**	"
10		140	66	2.5	"	"
15		93	97	1.8	"	"
20		70	125	1.5	"	"
25		56	150	1.3	"	"
30		46	174	1.1	"	"
35		40	194	1	"	"
40		35	213	0.9	"	"
15		93	97	3.1	**85**	"
20		70	126	2.3	"	"
25		56	152	2	"	"
30		46	176	2	"	"
35		40	197	1.6	"	"
40		35	219	1.5	"	"
45		31	240	1.3	"	"
50		28	259	1.1	"	"
60		23	306	0.9	"	"
7	900	128	71	2.2	**63**	"
10		90	99	1.6	"	"
15		60	143	1	"	"
7		128	72	2.6	"	"
10		90	100	2.2	"	"
15		60	145	1.5	"	"
20		45	187	1.2	"	"
15		60	145	2.3	**85**	"
20		45	187	1.6	"	"
25		36	227	1.5	"	"
30		30	252	1.5	"	"
35		26	286	1.2	"	"
40		23	318	1.1	"	"
45		20	357	1	"	"

WORM SCREW REDUCTION GEARS AND MOTOR REDUCTION GEARS

KW 1.5					HP 2.0	
i	n1	n2	M1'	FG	FRD	iEC
7	2800	400	32	3.1	**63**	**90**
10		280	45	2.3	"	"
15		186	66	1.6	"	"
20		140	86	1.2	"	"
25		112	105	1	"	"
10		280	46	3	**70**	"
15		186	67	2.3	"	"
20		140	87	1.7	"	"
25		112	106	1.2	"	"
30		93	122	1.2	"	"
35		80	138	1	"	"
15		186	67	3.3	**85**	"
20		140	88	2.4	"	"
25		112	108	2.1	"	"
30		93	123	2	"	"
35		80	142	1.8	"	"
40		70	158	1.7	"	"
45		62	173	1.4	"	"
50		56	189	1.2	"	"
7	1400	200	63	2.1	**63**	"
10		140	89	1.6	"	"
15		93	131	1	"	"
7		200	64	2.3	**70**	"
10		140	90	1.8	"	"
15		93	132	1.3	"	"
20		70	170	1	"	"
25		56	204	0.9	"	"
10		140	90	3	**85**	"
15		93	132	2.2	"	"
20		70	172	1.7	"	"
25		56	207	1.5	"	"
30		46	240	1.5	"	"
35		40	268	1.2	"	"
40		35	299	1.1	"	"
45		31	328	0.9	"	"
7	900	128	97	1.9	**70**	**100**
10		90	136	1.4	"	"
15		60	198	1	"	"
7		128	98	2.8	**85**	"
10		90	137	2.1	"	"
15		60	199	1.7	"	"
20		45	255	1.2	"	"
25		36	310	1	"	"
30		30	344	1	"	"

KW 1.85					HP 2.5	
i	n1	n2	M1'	FG	FRD	iEC
7	2800	400	39	2.5	**63**	**90**
10		280	56	1.8	"	"
15		186	82	1.3	"	"
20		140	106	1	"	"
7		400	40	3.1	**70**	"
10		280	56	2.4	"	"
15		186	83	1.8	"	"
20		140	107	1.3	"	"
25		112	131	1	"	"
30		93	150	0.9	"	"
15		186	83	2.7	**85**	"
20		140	109	1.9	"	"
25		112	133	1.7	"	"
30		93	152	1.6	"	"
35		80	175	1.5	"	"
40		70	194	1.4	"	"
7	1400	200	78	1.7	**63**	"
10		140	110	1.3	"	"
15		93	161	0.85	"	"
7		200	79	1.9	**70**	"
10		140	111	1.5	"	"
15		93	163	1.1	"	"
20		70	209	0.85	"	"
7		200	79	3.1	**85**	"
10		140	111	2.4	"	"
15		93	164	1.8	"	"
20		70	212	1.4	"	"
25		56	255	1.2	"	"
30		46	296	1.2	"	"
35		40	331	1	"	"
40		35	368	0.9	"	"
7	900	128	120	1.6	**70**	**100**
10		90	169	1.3	"	"
15		60	244	0.9	"	"
7		128	120	2.3	**85**	"
10		90	169	1.7	"	"
15		60	245	1.4	"	"
20		45	314	1	"	"
25		36	382	0.9	"	"
30		30	424	0.9	"	"

KW 2.2					HP 3.0	
i	n1	n2	M1'	FG	FRD	iEC
7	2800	400	47	2.1	**63**	**90**
10		280	66	1.5	"	"
15		186	98	1.1	"	"
7		400	47	2.6	**70**	"
10		280	66	2	"	"
15		186	98	1.5	"	"
20		140	128	1.1	"	"
10		280	67	3	**85**	"
15		186	99	2.2	"	"
20		140	129	1.6	"	"
25		112	157	1.5	"	"
30		93	181	1.4	"	"
35		80	207	1.2	"	"
7	1400	200	93	1.6	**70**	**100**
10		140	132	1.2	"	"
15		93	194	0.9	"	"
7		200	94	2.6	**85**	"
10		140	132	2	"	"
15		93	195	1.5	"	"
20		70	252	1.1	"	"
25		56	304	1	"	"
30		46	352	1	"	"
7	900	128	143	1.9	**85**	**112**
10		90	200	1.5	"	"
15		60	290	1.1	"	"

KW 3.0					HP 4.0	
i	n1	n2	M1'	FG	FRD	iEC
7	2800	400	64	1.9	**70**	**100**
10		280	91	1.5	"	"
15		186	134	1.1	"	"
7		400	65	2.9	**85**	"
10		280	91	2.2	"	"
15		186	134	1.7	"	"
20		140	176	1.2	"	"
25		112	215	1.1	"	"
30		93	247	1	"	"
7	1400	200	127	1.2	**70**	"
10		140	180	0.9	"	"
7		200	128	1.9	**85**	"
10		140	180	1.5	"	"
15		93	265	1.1	"	"

KW 4.0					HP 5.5	
i	n1	n2	M1'	FG	FRD	iEC
7	2800	400	86	2.1	**85**	**112**
10		280	121	1.6	"	"
15		186	178	1.2	"	"
7	1400	200	170	1.4	"	"
10		140	240	1.2	"	"
15		93	353	0.9	"	"

GRD GEARMOTORS PERFORMANCE (WITH MOTOR TYPE 56 - NEMA)

POWER HP	POWER KW	n1	ratio	n2	M1'	Fs	Gearbox Size
0.25	0.18	1700	80	21	41	1.1	50
			100	17	49	1	
0.35	0.25		15	112	17	3.9	50
			20	84	21	3.2	
			30	56	30	2.6	
			40	42	37	2.2	
			50	34	44	1.5	
			60	28	52	1.4	
			70	24	56	1.2	
			80	21	58	0.8	
			35	48	37	3.4	63
			40	42	40	2.8	
			45	37	43	2.6	
			50	34	45	2.3	
			60	28	53	1.9	
			70	24	56	1.7	
			80	21	63	1.6	
			100	17	68	1.3	
			45	37	44	3.2	70
			50	34	47	3	
			60	28	53	2.6	
			70	24	58	2.3	
			80	21	64	2	
			100	17	70	1.5	
			80	21	73	3.4	85
			100	17	77	2.8	

POWER HP	POWER KW	n1	ratio	n2	M1'	Fs	Gearbox Size
0.50	0.37	1700	10	170	18	4	50
			15	112	25	2.6	
			20	84	32	2.2	
			30	56	46	1.75	
			40	42	54	1.5	
			50	34	65	1.05	
			60	28	77	0.95	
			20	84	35	3.5	63
			25	67	42	3	
			30	56	48	2.7	
			35	48	54	2.3	
			40	42	59	1.9	
			45	37	63	1.7	
			50	34	66	1.6	
			60	28	78	1.3	
			70	24	83	1.2	
			80	21	93	1.1	
			100	17	101	0.85	
			45	37	66	2.2	70
			50	34	69	2	
			60	28	79	1.7	
			70	24	85	1.5	
			80	21	95	1.3	

POWER HP	POWER KW	n1	ratio	n2	M1'	Fs	Gearbox Size
0.50	0.37	1700	100	17	103	1	70
			50	34	73	3.4	85
			60	28	86	2.8	
			70	24	94	2.5	
			80	21	108	2.3	
			100	17	113	1.9	

POWER HP	POWER KW	n1	ratio	n2	M1'	Fs	Gearbox Size
0.75	0.55	1700	7.5	224	21	3.4	50
			10	170	27	2.7	
			15	112	38	1.8	
			20	84	47	1.5	
			30	56	68	1.2	
			40	48	82	1	
			15	112	40	2.8	63
			20	84	52	2.4	
			25	67	62	2	
			30	56	73	1.8	
			35	48	80	1.5	
			40	42	88	1.3	
			45	37	94	1.2	
			50	34	98	1.05	
			20	84	52	2.9	70
			25	67	63	2.5	
			30	56	73	2.3	
			35	48	81	2	
			40	42	89	1.7	
			45	37	98	1.4	
			50	34	103	1.3	
			60	28	118	1.2	
			70	24	127	1	
			80	21	142	0.9	
			40	42	92	3.1	85
			45	37	100	2.5	
			50	34	108	2.3	
			60	28	128	1.9	
			70	24	140	1.7	
			80	21	160	1.5	
			100	17	168	1.3	

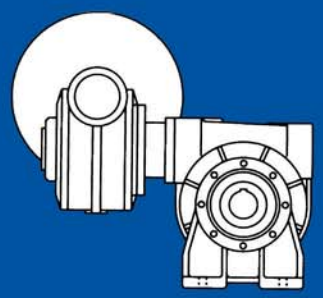
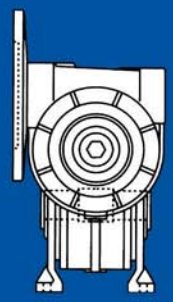
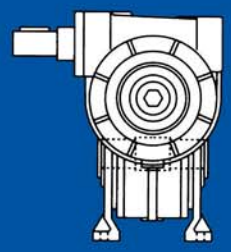
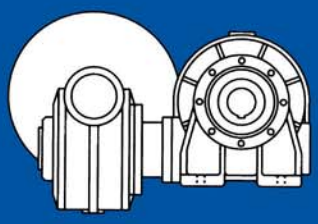
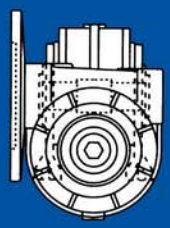
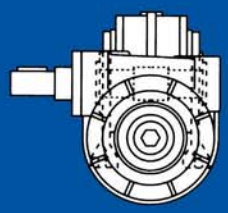

CRD - CFRD

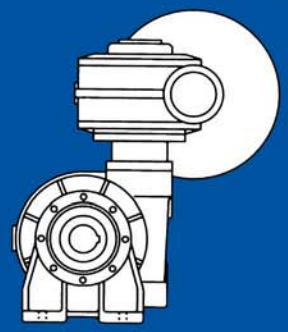
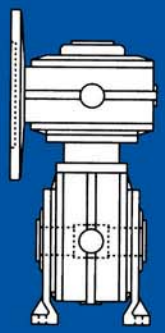
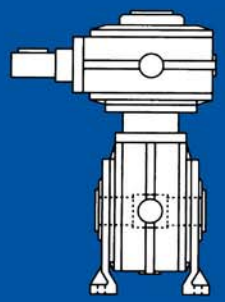
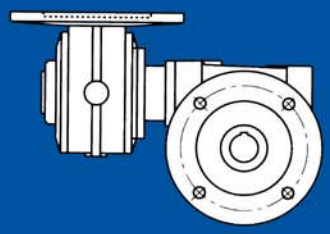
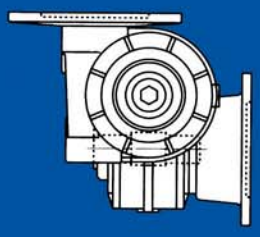
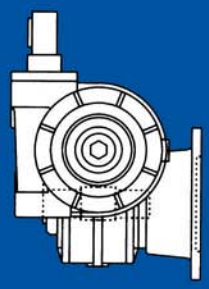
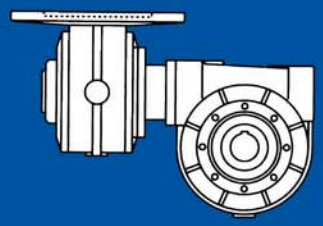
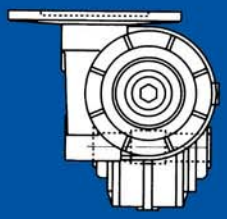

3.0 COMBINED WORM GEARBOXES AND WORM GEAR MOTORS

The technical and structural characteristics are the same as those of the worm gearboxes. Product quality is the result of meticulous machining processes and specific controls during manufacture. Assembly is carried out by competent, quality-conscious personnel. Combinations and gear ratios not shown in the tables can also be obtained; it should be borne in mind that beyond certain ratios (2500 and over), the structural modulus of the worm gear plus crown gear pairing diminishes considerably, making a technical inspection necessary prior to proceeding with the application. Our Special Products Department is on hand to assist with any requirements.

3.1 SYMBOLS AND DESIGNATION

CRD - COMBINED WORM SCREW REDUCTION GEARS	CFRD - COMBINED WORM SCREW REDUCTION GEARS WITH MOTOR FLANGE
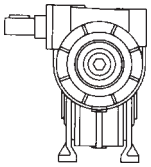	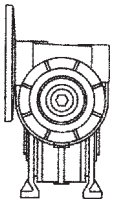

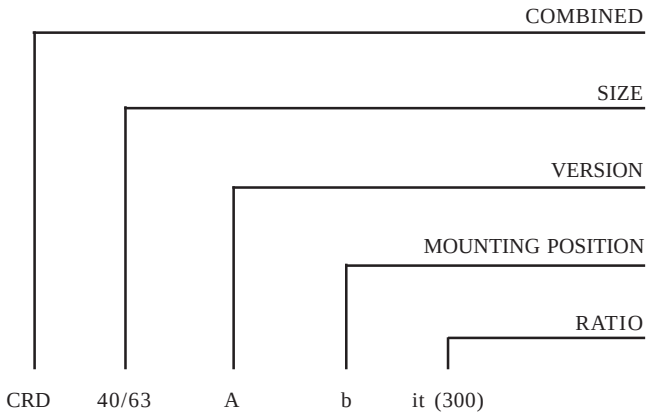

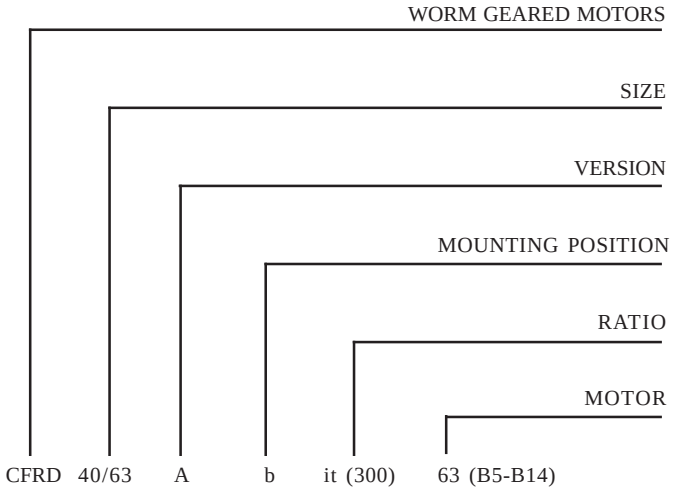

N.B. - Unless otherwise specified, the FB flange will be fitted as per the catalog.

3.2 VERSIONS

CFRD / A

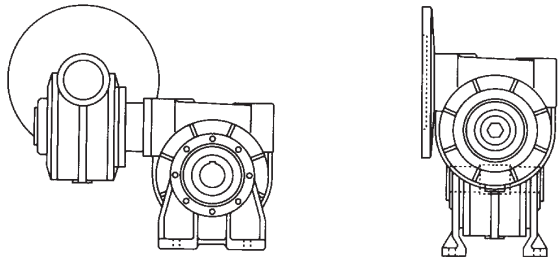

CRD / A

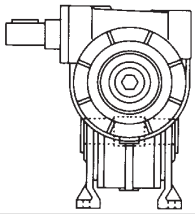

CFRD / B

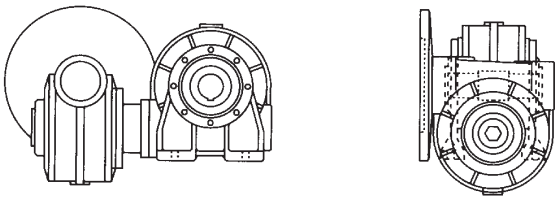

CRD / B

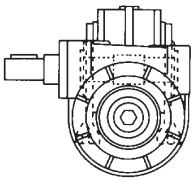

CFRD / V

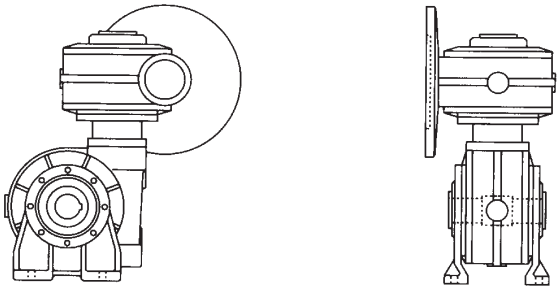

CRD / V

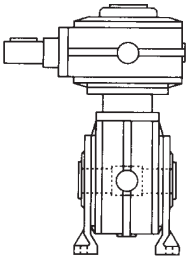

CFRD / FB

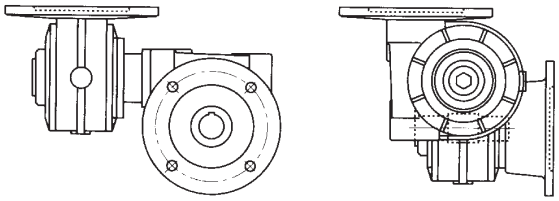

CRD / FB

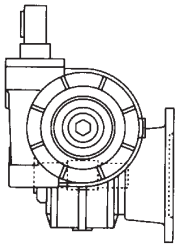

CFRD / FP

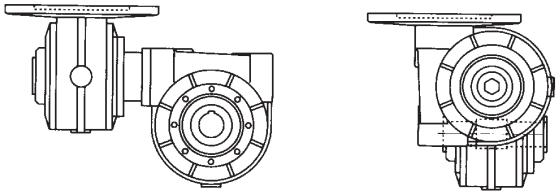

CRD / FP

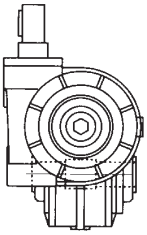

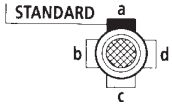

Terminal Board Position

3.3 MOUNTING POSITIONS

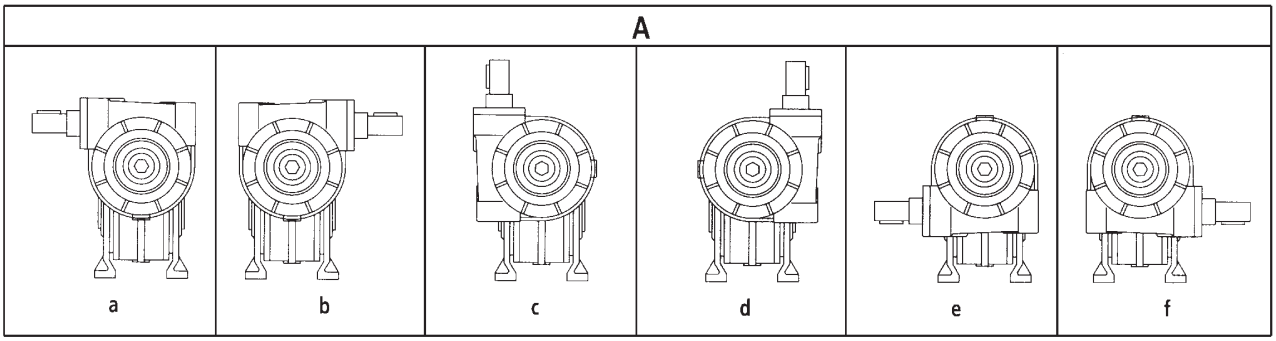

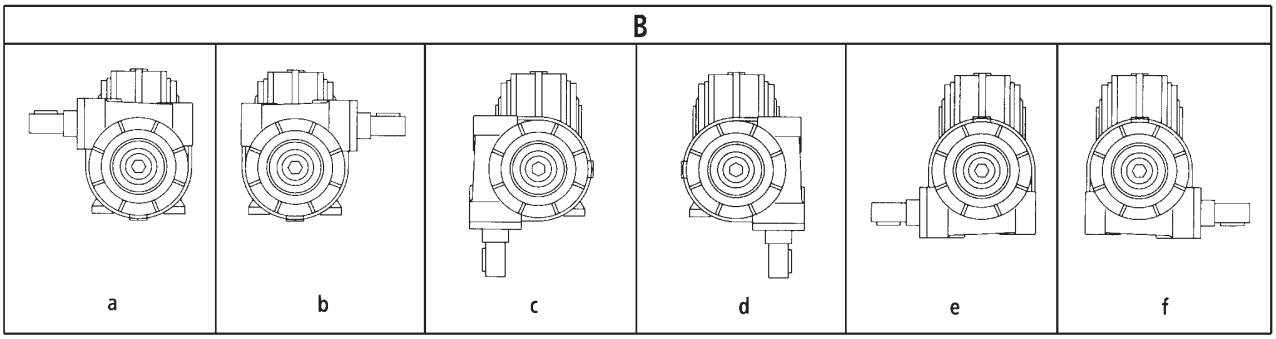

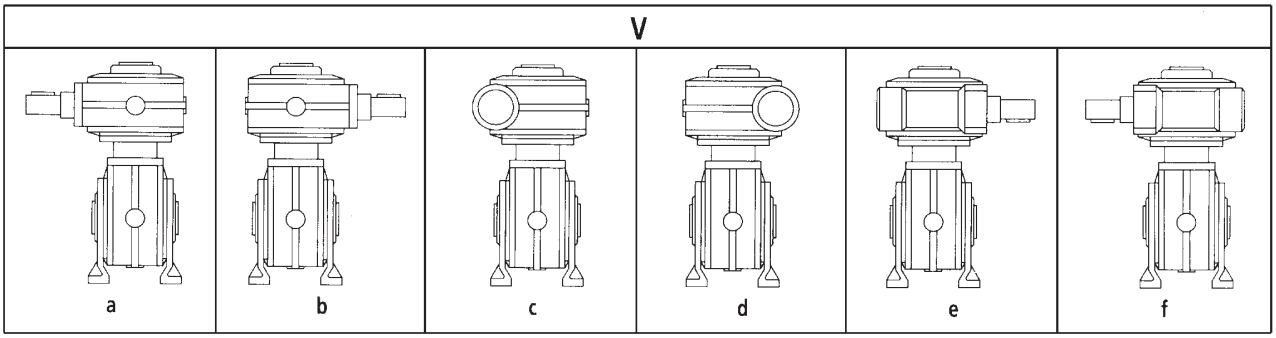

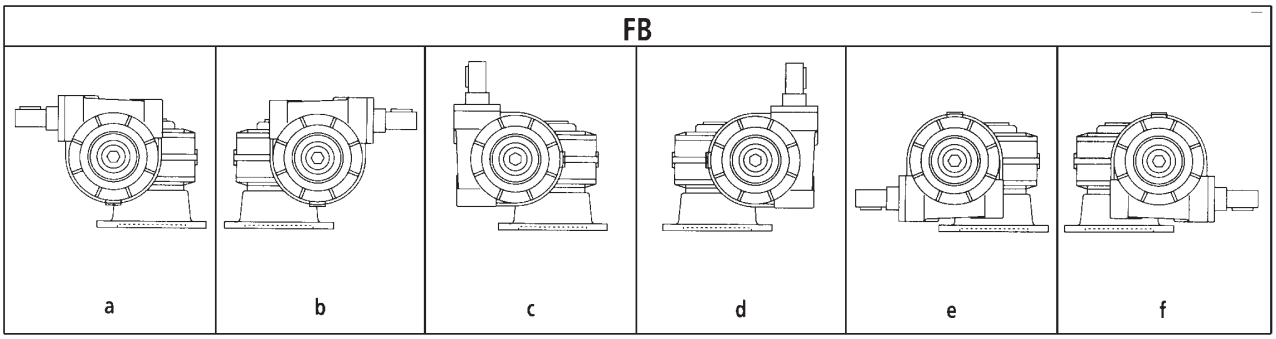

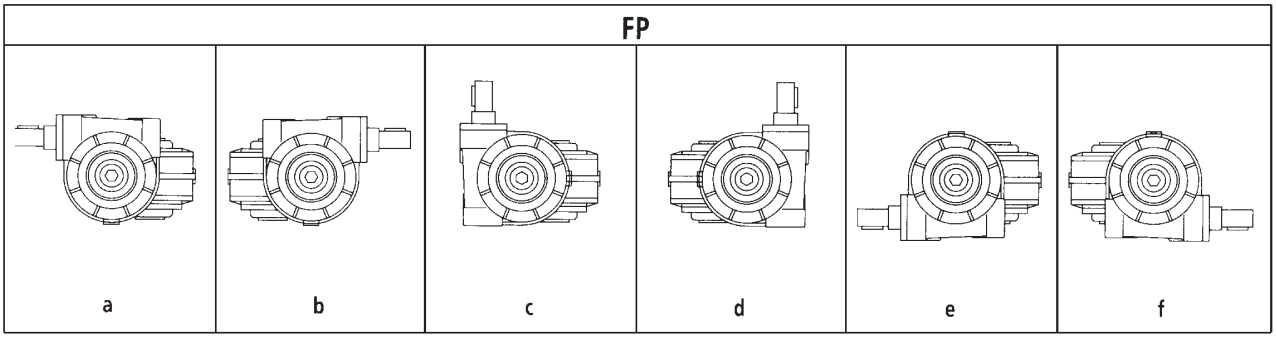

3.4 DIMENSIONS

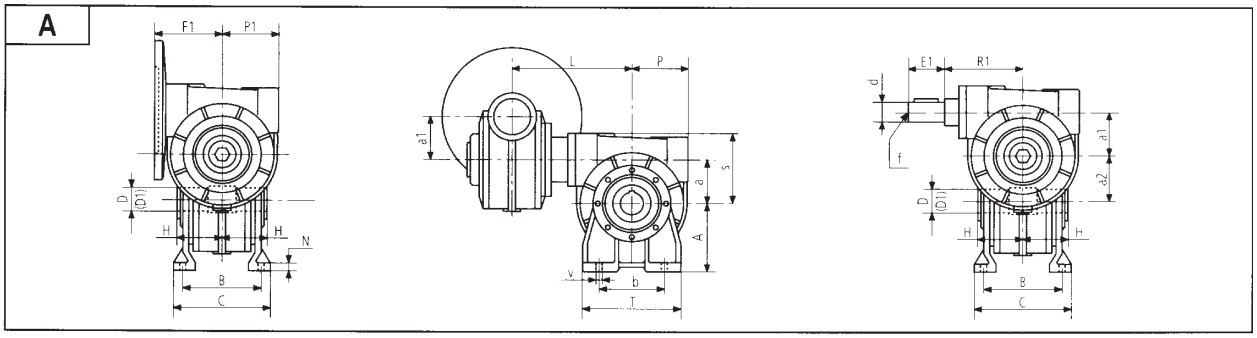

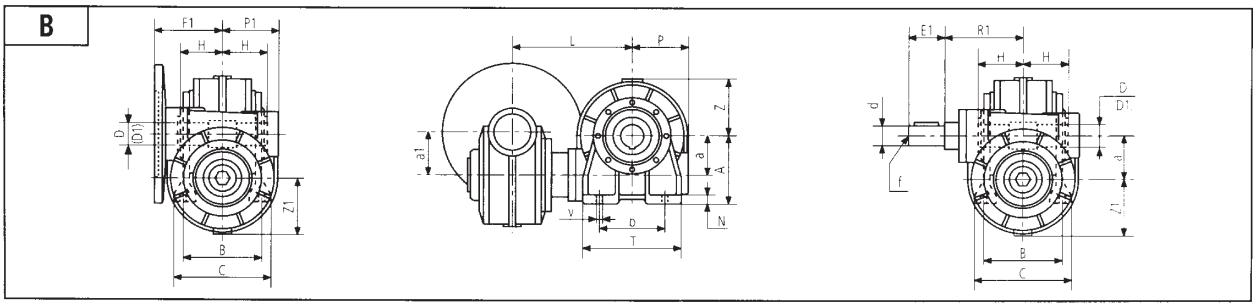

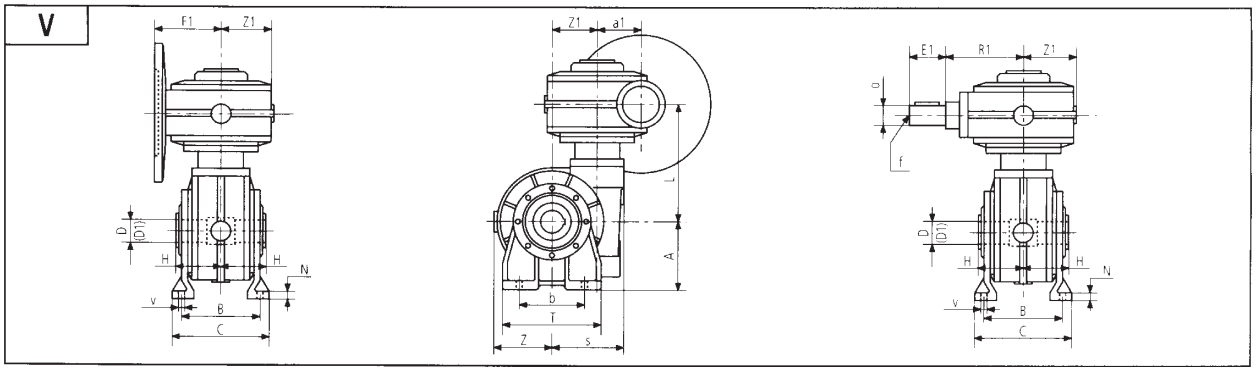

	TYPE A-B-V												
	30/40	**30/50**	**30/63**	**40/50**	**40/63**	**40/70**	**40/85**	**50/63**	**50/70**	**50/85**	**63/70**	**63/85**	**70/85**
A	71	85	100	85	100	115	142	100	115	142	115	142	142
a	40	50	63	50	63	70	85	63	70	85	70	85	85
a1	31.5	31.5	31.5	40	40	40	40	50	50	50	63	63	70
a2	71.5	81.5	91.5	90	103	110	125	113	120	135	133	148	155
B	84	*96/99	111	*96/99	111	116	*140/146	111	116	*140/146	116	*140/146	*140/146
b	70	85	95	85	95	120	140	95	120	140	120	140	140
C	102	120	136	120	136	142	176	136	142	176	142	176	176
D1H7	18	25	–	25	–	30	32	–	30	32	30	32	32
DH7	19	24	25	24	25	28	35	25	28	35	28	35	35
dj6	9	9	9	11	11	11	11	14	14	14	18	18	19
E1	22	22	22	22	22	22	22	30	30	30	45	45	40
F1	54	54	54	65	65	65	65	76	76	76	95	95	103
f	M4	M4	M4	M5	M5	M5	M5	M6	M6	M6	M6	M6	M6
H	41	49	60	49	60	60	70	60	60	70	60	70	70
L	96	108	130	117	133	138	165	141	146	170	164	186	187
N	9	12	12	12	12	12	14	12	12	14	12	14	14
P	61	72	80	72	80	85	105	80	85	105	85	105	105
P1	46	46	46	61	61	61	61	72	72	72	80	80	85
R1	53	53	53	65	65	65	65	75	75	65	94	94	100
S	70	82	98	82	98	112	129	98	112	129	112	129	129
S1	50	50	50	70	70	70	70	82	82	82	98	98	112
T	106	125	140	125	140	156	200	140	156	200	156	200	200
V	8.5	9	11	9	11	12	12	11	12	12	12	12	12
Z	52	64	75	64	75	82	100	75	82	100	82	100	100
Z1	39	39	39	52	52	52	52	64	64	64	75	75	82

FB

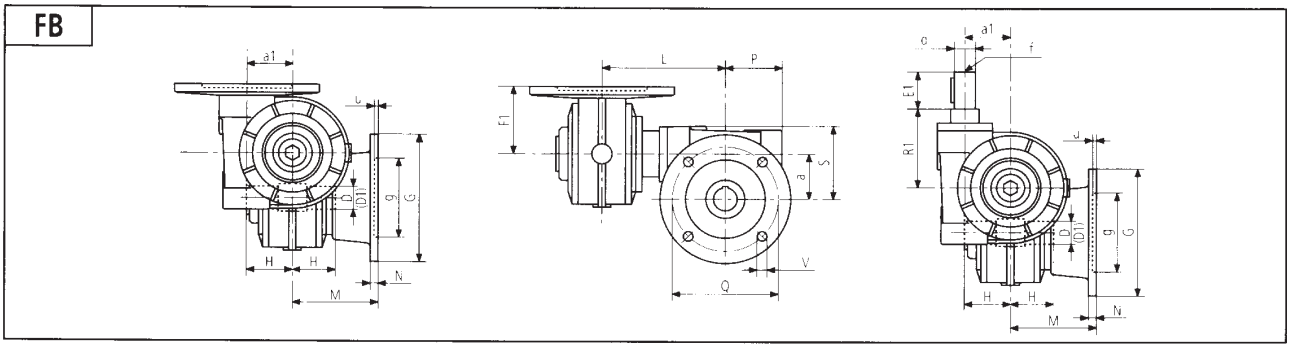

FP

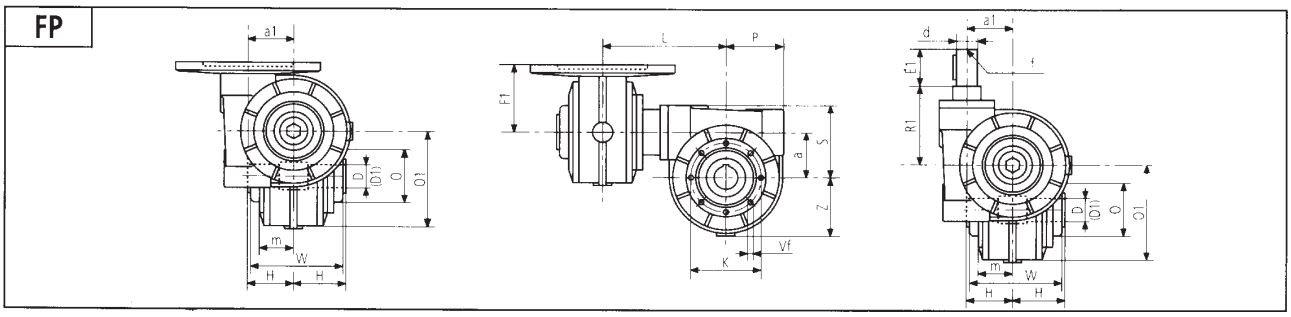

	TYPE FB - FP												
	30/40	**30/50**	**30/63**	**40/50**	**40/63**	**40/70**	**40/85**	**50/63**	**50/70**	**50/85**	**63/70**	**63/85**	**70/85**
a	40	50	63	50	63	70	85	63	70	85	70	85	85
a1	31.5	31.5	31.5	40	40	40	40	50	50	50	63	63	70
D1H7	18	25	–	25	–	30	32	–	30	32	30	32	32
DH7	19	24	25	24	25	28	35	25	28	35	28	35	35
dj6	9	9	9	11	11	11	11	14	14	14	18	18	19
E1	22	22	22	22	22	22	22	30	30	30	45	45	40
F1	54	54	54	65	65	65	65	76	76	76	95	95	103
f	M4	M4	M4	M5	M5	M5	M5	M6	M6	M6	M6	M6	M6
G	140	160	180	160	180	200	210	180	200	210	200	210	210
gH8	95	110	115	110	115	130	152	115	130	152	130	152	152
H	41	49	60	49	60	60	70	60	60	70	60	70	70
L	96	108	130	117	133	138	165	141	146	170	164	186	187
M	82	92	116	92	116	111	151	116	111	151	111	151	151
m	38	46	45	46	45	50	56.5	45	50	56.5	50	56.5	56.5
N	10	10	11	10	11	12	14	11	12	14	12	14	14
O	60	70	75	70	75	90	110	75	90	110	90	110	110
O 1	100	120	110	120	110	128	150	110	128	150	128	150	150
P	61	72	80	72	80	85	105	80	85	105	85	105	105
Q	115	130	150	130	150	165	176	150	165	176	165	176	176
R1	53	53	53	65	65	65	65	75	75	75	94	94	100
S	70	82	98	82	98	112	129	98	112	129	112	129	129
u	5	5	7	5	7	5	6	7	5	6	5	6	6
V	9	10	11	10	11	13	12	11	13	12	13	12	12
Vf	M6	M8	M8	M8	M8	M8	M10	M8	M8	M10	M8	M10	M10
Z	52	64	75	64	75	82	100	75	82	100	82	100	100
K	83	85	90	85	90	110	130	90	110	130	110	130	130
W	80	92	114	92	114	114	133	114	114	133	114	133	133

	TYPE FB1 - FB2 - FB3 - FB4 - FB5 - FB6																			
	30/40					**30/50 - 40/50**						**30/63 40/63 50/63**			**40/70 50/70 63/70**				**40/85 50/85 63/85 70/85**	
	FB1	**FB2**	**FB3**	**FB4**	**FB5**	**FB1**	**FB2**	**FB3**	**FB4**	**FB5**	**FB6**	**FB1**	**FB2**	**FB3**	**FB1**	**FB2**	**FB3**	**FB4**	**FB1**	**FB2**
G	110	115	110	115	115	125	125	125	140	140	125	180	200	160	200	175	160	160	160	200
gH8	60	60	60	80	80	70	70	70	95	95	70	115	130	110	130	115	110	110	110	130
M	60	60	69	60	62	85	93	73	75	81	85	85	102	82	85	116	85	101	100	120
N	8	8	17	8	10	10	11	8	10	11	9.5	11	11	11	12	12	12	12	13	13
Q	87	87	87	100	100	90	90	100	115	115	90	150	165	130	165	150	130	130	130	165
u	5	5	6	3.5	5	4.5	5	4	4	5	4.5	7	6	5	5	5	5	6	6	6
V	9	9	9	9	9	11	11	9	10	11	10	11	13	10	13	11	11	11	11	12

3.5 PERFORMANCE OF REDUCTION GEARS

CRD 30/40

		it										
		150	225	300	450	600	900	1200	1500	2100		
n1 RPM	i1 x i2	7.5x20	7.5x30	10x30	15x30	20x30	30x30	40x30	50x30	70x30		
1400	n2	9.3	6.2	4.7	3.1	2.3	1.5	1.2	0.9	0.67		
	M1	62	65	65	65	65	65	65	65	62		
	KW	0.13	0.10	0.08	0.06	0.05	0.04	0.03	0.02	0.02		
	HP	0.18	0.13	0.11	0.08	0.07	0.05	0.04	0.03	0.03		
	Rd	0.45	0.41	0.39	0.35	0.33	0.28	0.28	0.28	0.23		

CRD 30/50

		it										
		150	225	300	450	600	900	1200	1500	2100	2400	
n1 RPM	i1 x i2	7.5x20	7.5x30	10x30	15x30	20x30	30x30	40x30	50x30	70x30	80x30	
1400	n2	9.3	6.2	4.7	3.1	2.3	1.5	1.2	0.9	0.67	0.58	
	M1	115	120	120	125	125	125	125	125	120	120	
	KW	0.23	0.17	0.13	0.10	0.07	0.06	0.05	0.04	0.04	0.03	
	HP	0.31	0.23	0.18	0.13	0.09	0.08	0.07	0.05	0.05	0.04	
	Rd	0.49	0.47	0.46	0.42	0.44	0.35	0.35	0.29	0.23	0.21	

CRD 30/63

		it										
		150	200	250	300	375	500	700	900	1200	1800	2700
n1 RPM	i1 x i2	7.5x20	10x20	10x25	10x30	15x25	20x25	20x35	30x30	40x30	60x30	60x45
1400	n2	9.3	7	5.6	4.7	3.7	2.8	2	1.5	1.2	0.8	0.52
	M1	190	190	200	200	200	200	200	200	200	200	190
	KW	0.36	0.27	0.24	0.21	0.17	0.14	0.12	0.10	0.09	0.07	0.05
	HP	0.48	0.37	0.32	0.29	0.23	0.19	0.16	0.13	0.12	0.09	0.07
	Rd	0.52	0.52	0.49	0.46	0.45	0.42	0.35	0.31	0.27	0.25	0.22

CRD 40/50

		it										
		150	225	300	450	600	900	1200	1500	2100	2400	
n1 RPM	i1 x i2	7.5x20	7.5x30	10x30	15x30	20x30	30x30	40x30	50x30	70x30	80x30	
1400	n2	9.3	6.2	4.7	3.1	2.3	1.5	1.2	0.9	0.67	0.58	
	M1	135	140	140	140	140	150	140	140	130	130	
	KW	0.24	0.17	0.13	0.10	0.07	0.06	0.05	0.04	0.03	0.03	
	HP	0.32	0.23	0.18	0.13	0.09	0.08	0.07	0.05	0.04	0.04	
	Rd	0.54	0.53	0.52	0.48	0.46	0.41	0.37	0.34	0.30	0.26	

CRD 40/63

		it										
		150	200	250	300	400	500	700	900	1200	1800	2700
n1 RPM	i1 x i2	7.5x20	10x20	10x25	10x30	20x20	20x25	20x35	30x30	40x30	60x30	60x45
1400	n2	9.3	7	5.6	4.7	3.5	2.8	2	1.5	1.2	0.8	0.52
	M1	230	230	240	240	240	250	250	260	250	240	220
	KW	0.37	0.3	0.26	0.23	0.18	0.16	0.13	0.10	0.09	0.06	0.05
	HP	0.5	0.4	0.35	0.31	0.24	0.22	0.17	0.13	0.12	0.08	0.07
	Rd	0.60	0.56	0.55	0.51	0.49	0.46	0.42	0.40	0.37	0.33	0.26

CRD 40/70

		it										
		150	200	250	300	375	500	700	900	1200	1800	2700
n1 RPM	i1 x i2	7.5x20	10x20	10x25	10x30	15x25	20x25	20x35	30x30	40x30	60x30	60x45
1400	n2	9.3	7	5.6	4.7	3.7	2.8	2	1.5	1.2	0.8	0.52
	M1	300	310	310	315	315	315	310	310	310	310	280
	KW	0.48	0.38	0.31	0.30	0.25	0.20	0.16	0.12	0.10	0.07	0.06
	HP	0.65	0.51	0.42	0.40	0.33	0.27	0.21	0.16	0.14	0.10	0.07
	Rd	0.61	0.60	0.58	0.52	0.50	0.46	0.42	0.40	0.38	0.35	0.28

CRD 40/85

		it										
		150	200	250	300	400	600	900	1200	1800	2700	3500
n1 RPM	i1 x i2	7.5x20	10x20	10x25	10x30	10x40	30x20	30x30	40x30	40x45	60x45	70x50
1400	n2	9.3	7	5.6	4.7	3.5	2.3	1.5	1.2	0.8	0.52	0.4
	M1	450	450	450	460	460	460	470	470	460	450	44
	KW	0.73	0.6	0.5	0.5	0.4	0.26	0.19	0.17	0.13	0.10	0.09
	HP	1	0.81	0.7	0.7	0.6	0.35	0.25	0.23	0.17	0.13	0.12
	Rd	0.60	0.55	0.52	0.46	0.42	0.43	0.40	0.35	0.30	0.26	0.21

CRD 50/63

		it										
		150	200	250	300	400	600	900	1500	2000	2700	3500
n1 RPM	i1 x i2	7.5x20	10x20	10x25	10x30	10x40	30x20	30x30	30x50	40x50	60x45	70x50
1400	n2	9.3	7	5.6	4.7	3.5	2.3	1.5	0.93	0.70	0.52	0.40
	M1	250	250	270	270	270	270	270	250	250	240	230
	KW	0.40	0.33	0.29	0.26	0.21	0.16	0.11	0.07	0.06	0.05	0.04
	HP	0.55	0.45	0.39	0.35	0.28	0.22	0.15	0.10	0.08	0.07	0.05
	Rd	0.60	0.56	0.55	0.51	0.48	0.42	0.39	0.34	0.29	0.26	0.22

CRD 50/70

		it										
		150	200	250	300	400	600	900	1500	2000	2700	3500
n1 RPM	i1 x i2	7.5x20	10x20	10x25	10x30	10x40	30x20	30x30	30x50	40x50	60x45	70x50
1400	n2	9.3	7	5.6	4.7	3.5	2.3	1.5	0.93	0.70	0.52	0.40
	M1	320	330	340	340	340	340	340	330	330	330	310
	KW	0.51	0.40	0.34	0.32	0.25	0.19	0.13	0.08	0.07	0.06	0.05
	HP	0.69	0.55	0.46	0.44	0.33	0.25	0.18	0.11	0.10	0.08	0.07
	Rd	0.61	0.60	0.58	0.52	0.50	0.44	0.41	0.39	0.35	0.29	0.25

CRD 50/85

		it										
		150	200	250	300	400	600	900	1500	2000	2700	3500
n1 RPM	i1 x i2	7.5x20	10x20	10x25	10x30	10x40	30x20	30x30	30x50	40x50	60x45	70x50
1400	n2	9.3	7	5.6	4.7	3.5	2.3	1.5	0.93	0.70	0.52	0.40
	M1	480	480	480	500	490	490	510	500	500	490	480
	KW	0.78	0.63	0.52	0.50	0.39	0.28	0.20	0.14	0.12	0.10	0.10
	HP	1.06	0.85	0.7	0.68	0.53	0.38	0.27	0.19	0.17	0.13	0.13
	Rd	0.60	0.56	0.52	0.50	0.46	0.42	0.40	0.35	0.30	0.26	0.21

CRD 63/70

		it										
		140	200	250	300	400	500	700	900	1500	2000	3000
n1 RPM	i1 x i2	7x20	10x20	10x25	10x30	20x20	20x25	20x35	45x20	30x50	40x50	50x60
1400	n2	10	7	5.6	4.7	3.5	2.8	2	1.5	0.93	0.7	0.47
	M1	350	380	380	380	380	380	380	360	350	340	330
	KW	0.59	0.47	0.40	0.37	0.27	0.24	0.19	0.14	0.09	0.07	0.06
	HP	0.80	0.63	0.54	0.51	0.37	0.32	0.25	0.19	0.12	0.10	0.08
	Rd	0.62	0.60	0.54	0.50	0.51	0.47	0.42	0.40	0.39	0.35	0.28

CRD 63/85

		it										
		140	200	250	300	400	500	700	900	1500	2000	3000
n1 RPM	i1 x i2	7x20	10x20	10x25	10x30	20x20	20x25	20x35	45x20	30x50	40x50	50x60
1400	n2	10	7	5.6	4.7	3.5	2.8	2	1.5	0.93	0.7	0.47
	M1	520	530	530	530	530	530	530	520	530	520	510
	KW	0.88	0.69	0.60	0.53	0.40	0.34	0.26	0.20	0.14	0.12	0.10
	HP	1.19	0.94	0.81	0.72	0.54	0.47	0.36	0.27	0.19	0.16	0.13
	Rd	0.62	0.56	0.52	0.49	0.48	0.45	0.42	0.40	0.36	0.32	0.25

CRD 70/85

		it										
		140	200	250	300	400	500	700	900	1500	2000	3000
n1 RPM	i1 x i2	7x20	10x20	10x25	10x30	20x20	20x25	20x35	45x20	30x50	40x50	50x60
1400	n2	10	7	5.6	4.7	3.5	2.8	2	1.5	0.93	0.7	0.47
	M1	540	550	550	550	550	550	550	540	550	540	530
	KW	0.91	0.72	0.62	0.55	0.42	0.36	0.27	0.21	0.15	0.12	0.10
	HP	1.24	0.98	0.84	0.75	0.57	0.48	0.37	0.29	0.20	0.16	0.13
	Rd	0.62	0.56	0.52	0.49	0.48	0.45	0.42	0.40	0.36	0.32	0.25

3.6 PERFORMANCE OF MOTOR REDUCTION GEARS

KW 0.06 HP 0.08						
it	n1	n2	M1'	FG	CFRD	iEC
150		9.3	28	2.2	**30/40**	**56**
225		6.2	38	1.7	"	"
300		4.7	47	1.3	"	"
450		3.1	65	1	"	"
600		2.3	82	0.9	"	"
225		6.2	44	2.8	**30/50**	"
300		4.7	56	2.2	"	"
450		3.1	78	1.7	"	"
600		2.3	110	1.2	"	"
900		1.5	134	1	"	"
300		4.7	56	3.5	**30/63**	"
375		3.7	70	2.8	"	"
500		2.8	86	2.3	"	"
700		2	100	2	"	"
900	1400	1.5	118	1.7	"	"
1200		1.2	129	1.5	"	"
1800		0.8	179	1.2	"	"
2700		0.52	242	0.9	"	"
500		2.8	94	3.3	**40/70**	"
700		2	120	2.7	"	"
900		1.5	153	2	"	"
1200		1.2	181	1.7	"	"
1800		0.8	251	1.2	"	"
2700		0.52	308	1	"	"
900		1.5	153	3.2	**40/85**	"
1200		1.2	167	2.8	"	"
1800		0.8	215	2.2	"	
2700		0.52	286	1.7	"	"
3500		0.40	301	1.5	"	"

KW 0.09 HP 0.12						
it	n1	n2	M1'	FG	CFRD	iEC
150		9.3	42	2.2	**30/40**	**56**
225		6.2	57	1.1	"	"
300		4.7	71	0.9	"	"
150		9.3	45	2.5	**30/50**	"
225		6.2	65	1.9	"	"
300		4.7	84	1.4	"	"
450		3.1	116	1.1	"	"
200		7	64	3	**30/63**	"
250		5.6	75	2.7	"	"
300		4.7	84	2.3	"	"
375		3.7	105	1.9	"	"
500		2.8	129	1.5	"	"
700		2	150	1.3	"	"
900		1.5	178	1.1	"	"
1200		1.2	193	1	"	"
150		9.3	50	2.7	**40/50**	"
225		6.2	74	1.9	"	"
300		4.7	95	1.4	"	"
450	1400	3.1	133	1.1	"	"
240		5.6	85	2.9	**40/63**	"
300		4.7	93	2.5	"	"
400		3.5	120	2	"	"
500		2.8	141	1.8	"	"
700		2	180	1.4	"	"
900		1.5	229	1.1	"	"
1200		1.2	265	1	"	"
375		3.7	116	2.8	**40/70**	"
500		2.8	141	2.2	"	"
700		2	180	1.8	"	"
900		1.5	229	1.3	"	"
1200		1.2	272	1.1	"	"
600		2.3	161	2.9	**40/85**	"
900		1.5	229	2.1	"	"
1200		1.2	251	1.9	"	"
1800		0.8	322	1.4	"	"
2700		0.52	429	1.1	"	"
3500		0.4	451	1	"	"

KW 0.12 HP 0.18						
it	n1	n2	M1'	FG	CFRD	iEC
150		9.3	60	1.9	**30/50**	**63**
225		6.2	87	1.4	"	"
300		4.7	112	1.1	"	"
150		9.3	64	3	**30/63**	"
200		7	85	2.2	"	"
250		5.6	100	2	"	"
300		4.7	112	1.7	"	"
375		3.7	139	1.4	"	"
500		2.8	172	1.2	"	"
700		2	200	1	"	"
150		9.3	67	2	**40/50**	"
225		6.2	98	1.4	"	"
300		4.7	127	1.1	"	"
150		9.3	74	3.1	**40/63**	"
200		7	92	2.5	"	"
250		5.6	112	2.2	"	"
300		4.7	124	1.9	"	"
400		3.5	160	1.5	"	"
500		2.8	188	1.3	"	"
700		2	241	1.1	"	"
200		7	98	3.2	**40/70**	"
250		5.6	119	2.6	"	"
300		4.7	127	2.5	"	"
375		3.7	155	2.1	"	"
500		2.8	189	1.7	"	"
700	1400	2	241	1.3	"	"
900		1.5	306	1	"	"
400		3.5	138	3.3	**40/85**	"
600		2.3	214	2.2	"	"
900		1.5	306	1.6	"	"
1200		1.2	334	1.4	"	"
1800		0.8	430	1.1	"	"
150		9.3	74	3.3	**50/63**	"
200		7	92	2.7	"	"
250		5.6	113	2.4	"	"
300		4.7	125	2.2	"	"
400		3.5	157	1.7	"	"
600		2.3	209	1.3	"	"
900		1.5	298	0.9	"	"
200		7	98	3.3	**50/70**	"
250		5.6	119	2.8	"	"
300		4.7	127	2.7	"	"
400		3.5	164	2.1	"	"
600		2.3	219	1.6	"	"
900		1.5	313	1.1	"	"
400		3.5	151	3.25	**50/85**	"
600		2.3	209	2.3	"	"
900		1.5	306	1.7	"	"
1500		0.93	431	1.2	"	"
2000		0.7	491	1	"	"
2700		0.52	573	0.85	"	"
3500		0.4	601	0.85	"	"

KW 0.18				HP 0.25		
it	n1	n2	M1'	FG	CFRD	iEC
150		9.3	90	1.3	**30/50**	**63**
225		6.2	130	0.9	"	"
150		9.3	96	2	**30/63**	"
200		7	128	1.5	"	"
250		5.6	150	1.3	"	"
300		4.7	168	1.2	"	"
375		3.7	209	0.9	"	"
150		9.3	100	1.3	**40/50**	"
225		6.2	147	0.9	"	"
150		9.3	111	2.1	**40/63**	"
200		7	138	1.7	"	"
250		5.6	169	1.4	"	"
300		4.7	187	1.3	"	"
400		3.5	241	1	"	"
150		9.3	89	2.7	**40/70**	"
200		7	147	2.1	"	"
250		5.6	178	1.7	"	"
300		4.7	190	1.6	"	"
375		3.7	232	1.4	"	"
500	1400	2.8	282	1.1	"	"
700		2	361	0.9	"	"
400		3.5	206	2.2	**40/85**	"
600		2.3	321	1.4	"	"
900		1.5	458	1.1	"	"
1200		1.2	501	0.9	"	"
150		9.3	111	2.2	**50/63**	"
200		7	137	1.8	"	"
250		5.6	169	1.6	"	"
300		4.7	186	1.4	"	"
400		3.5	236	1.2	"	"
200		7	147	2.2	**50/70**	"
250		5.6	178	1.9	"	"
300		4.7	190	1.8	"	"
400		3.5	245	1.4	"	"
600		2.3	329	1.1	"	"
300		4.7	183	2.8	**50/85**	"
400		3.5	226	2.2	"	"
600		2.3	314	1.6	"	"
900		1.5	458	1.1	"	"

KW 0.25				HP 0.35		
it	n1	n2	M1'	FG	CFRD	iEC
150		9.3	134	1.4	**30/63**	**71**
200		7	177	1.2	"	"
250		5.6	209	1	"	"
150		9.3	154	1.5	**40/63**	"
200		7	191	1.2	"	"
250		5.6	235	1	"	"
300		4.7	259	0.9	"	"
150		9.3	157	1.9	**40/70**	"
200		7	205	1.5	"	"
250		5.6	247	1.2	"	"
300		4.7	264	1.2	"	"
375		3.7	323	1	"	"
200		7	188	2.4	**40/85**	"
250		5.6	222	2	"	"
300		4.7	234	2	"	"
400		3.5	287	1.6	"	"
600		2.3	446	1	"	"
150		9.3	154	1.6	**50/63**	"
200		7	191	1.3	"	"
250		5.6	235	1.2	"	"
300		4.7	259	1	"	"
150		9.3	156	2	**50/70**	"
200		7	205	1.6	"	"
250		5.6	247	1.4	"	"
300		4.7	264	1.3	"	"
400		3.5	341	1	"	"
200	1400	7	191	2.5	**50/85**	"
250		5.6	222	2.1	"	"
300		4.7	254	2	"	"
400		3.5	314	1.6	"	"
600		2.3	436	1.1	"	"
140		10	148	2.4	**63/70**	"
200		7	205	1.9	"	"
250		5.6	230	1.6	"	"
300		4.7	254	1.5	"	"
400		3.5	348	1.1	"	"
500		2.8	401	1	"	"
700		2	501	0.8	"	"
200		7	191	2.8	**63/85**	"
250		5.6	222	2.4	"	"
300		4.7	249	2.1	"	"
400		3.5	327	1.6	"	"
500		2.8	384	1.4	"	"
700		2	501	1	"	"
900		1.5	637	0.8	"	"
200		7	191	2.9	**70/85**	"
250		5.6	222	2.5	"	"
300		4.7	249	2.2	"	"
400		3.5	327	1.7	"	"
500		2.8	384	1.4	"	"
700		2	501	1.1	"	"
900		1.5	637	0.85	"	"

KW 0.37				HP 0.50		
it	n1	n2	M1'	FG	CFRD	iEC
150		9.3	232	1.3	**40/70**	**71**
200		7	303	1	"	"
150		9.3	228	2	**40/85**	"
200		7	278	1.6	"	"
250		5.6	328	1.4	"	"
300		4.7	346	1.4	"	"
400		3.5	424	1.1	"	"
150		9.3	228	1.1	**50/63**	"
200		7	283	0.9	"	"
150		9.3	232	1.4	**50/70**	"
200		7	303	1.1	"	"
250		5.6	366	0.9	"	"
150		9.3	228	2.1	**50/85**	"
200		7	283	1.7	"	"
250		5.6	328	1.4	"	"
300		4.7	376	1.3	"	"
400	1400	3.5	464	1.1	"	"
140		10	219	1.6	**63/70**	"
200		7	303	1.3	"	"
250		5.6	341	1.1	"	"
300		4.7	376	1	"	"
140		10	219	2.4	**63/85**	"
200		7	283	1.9	"	"
250		5.6	328	1.6	"	"
300		4.7	368	1.4	"	"
400		3.5	485	1.1	"	"
500		2.8	568	0.9	"	"
150		10	353	2.5	**70/85**	"
200		7	283	1.9	"	"
250		5.6	328	1.7	"	"
300		4.7	368	1.5	"	"
400		3.5	485	1.1	"	"
500		2.8	568	1	"	"

KW 0.55				HP 0.75		
it	n1	n2	M1'	FG	CFRD	iEC
150		9.3	339	1.3	**40/85**	**80**
200		7	413	1.1	"	"
250		5.6	488	0.9	"	"
150		9.3	339	1.4	**50/85**	"
200		7	420	1.15	"	"
250		5.6	488	0.95	"	"
300		4.7	559	0.9	"	"
140	1400	10	326	1.1	**63/70**	"
140		10	326	1.6	**63/85**	"
200		7	420	1.3	"	"
250		5.6	488	1.1	"	"
300		4.7	584	0.95	"	"
140		10	326	1.7	**70/85**	"
200		7	420	1.3	"	"
250		5.6	488	1.1	"	"
300		4.7	548	1	"	"

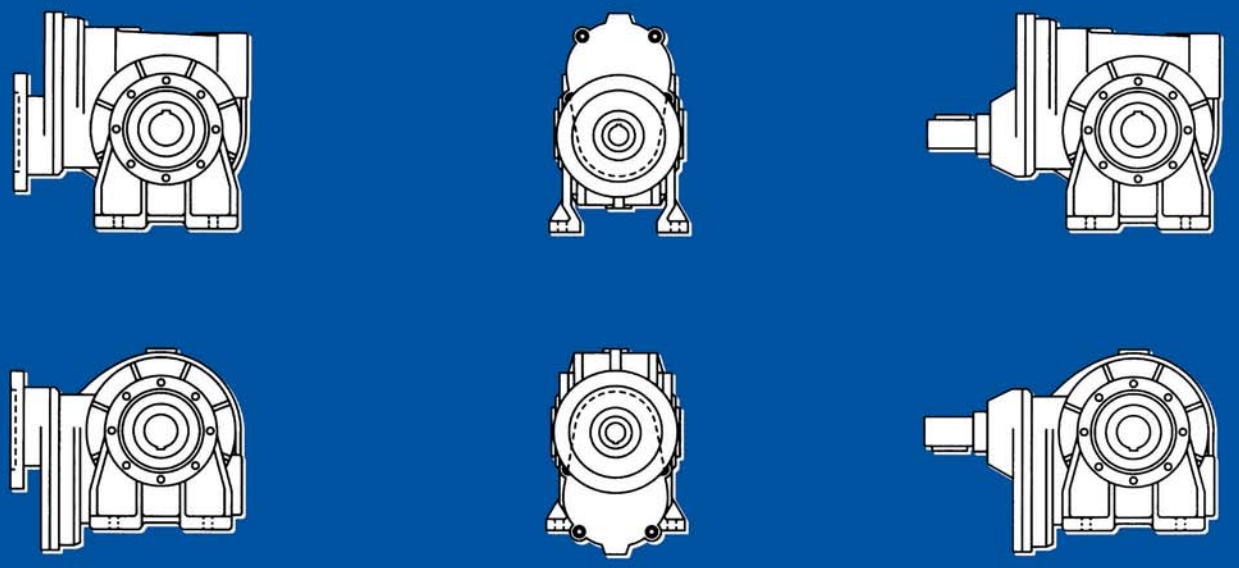

PRD - PFRD

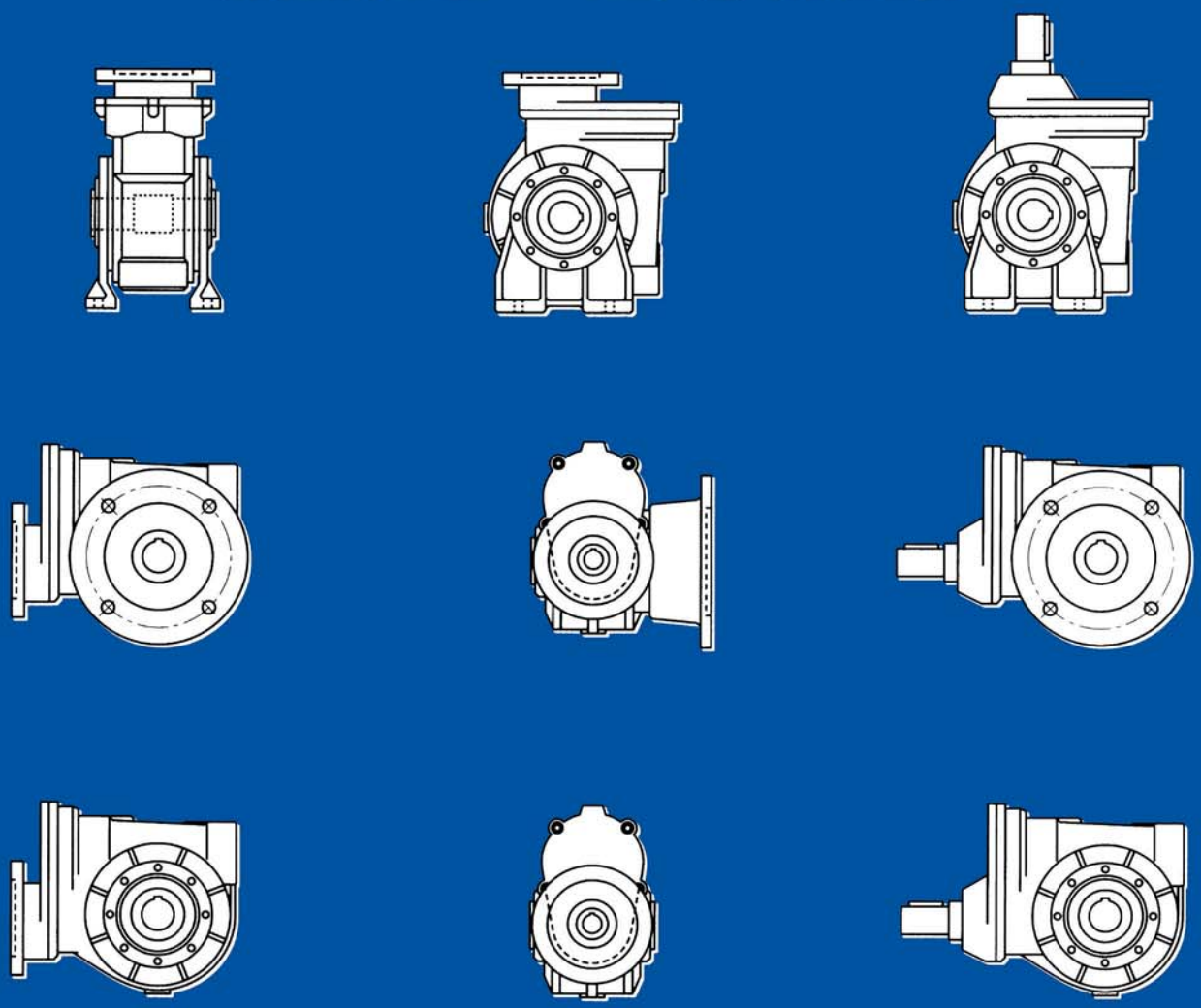

4.0 WORM GEARBOXES AND WORM GEAR MOTORS WITH PRIMARY REDUCTION (2 HELICAL GEARS)

In this case too, the technical and structural characteristics are the same as those of the worm gearboxes and worm gear motors. We have adopted a structural system whereby we can supply a PAM type closed gear motor with primary reduction without having to supply the motor pre-mounted. The customer is free to choose the motor he wants, and to fit it in the same way as on a normal PAM gearbox. In the performance tables (PRD) only gear ratios from 1 to 3 are shown, though higher ratios can be provided on request.

4.1 SYMBOLS AND DESIGNATION

PRD - WORM SCREW REDUCTION GEARS WITH PRIMARY REDUCTION	PFRD - WORM SCREW REDUCTION GEARS WITH PRIMARY REDUCTION AND MOTOR FLANGE
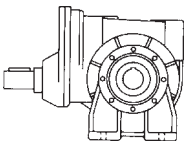	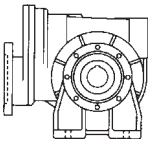

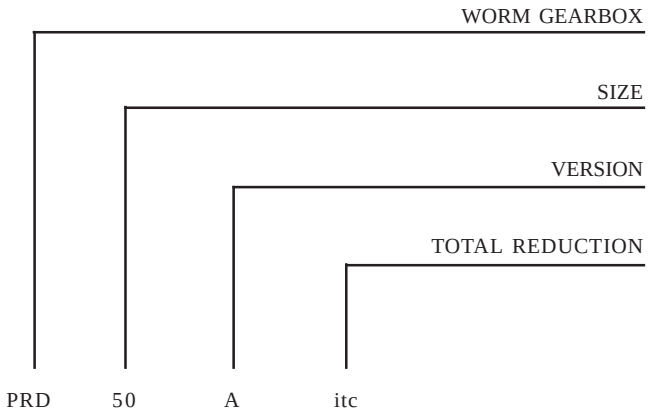

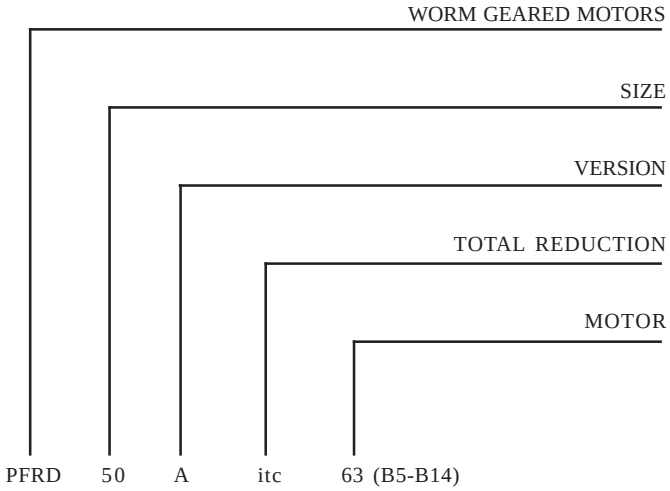

N.B. - Unless otherwise specified, the FB flange will be fitted as per the catalog.

4.2 VERSIONS

PFRD / A

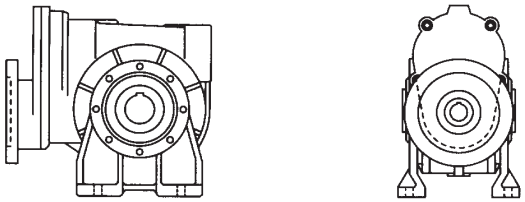

PRD / A

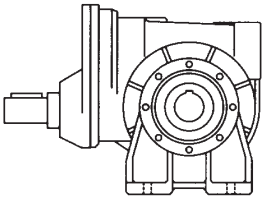

PFRD / B

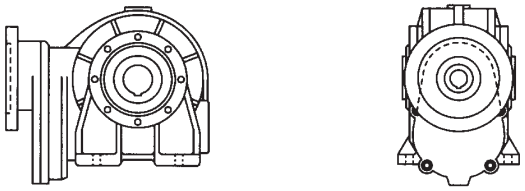

PRD / B

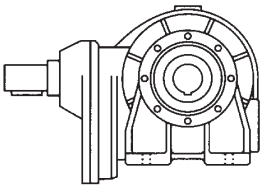

PFRD / V

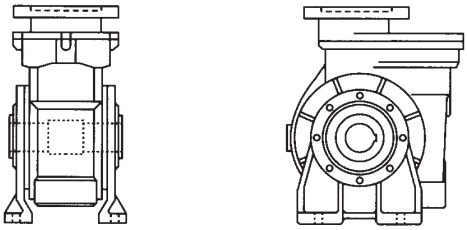

PRD / V

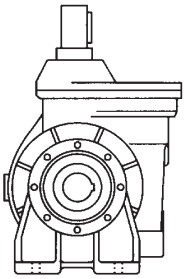

PFRD / FB

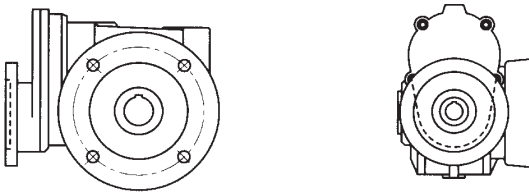

PRD / FB

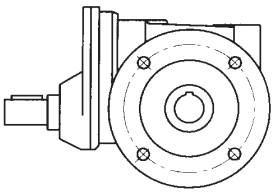

PRD / FP

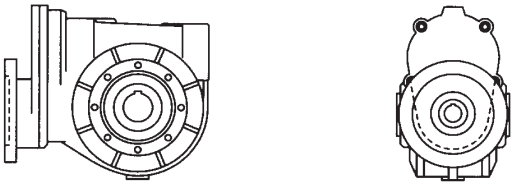

PRD / FP

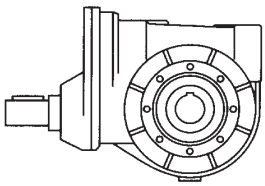

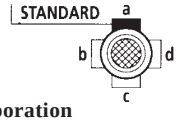

Terminal Board Position

4.3 DIMENSIONS

PFRD 40/A (A1)

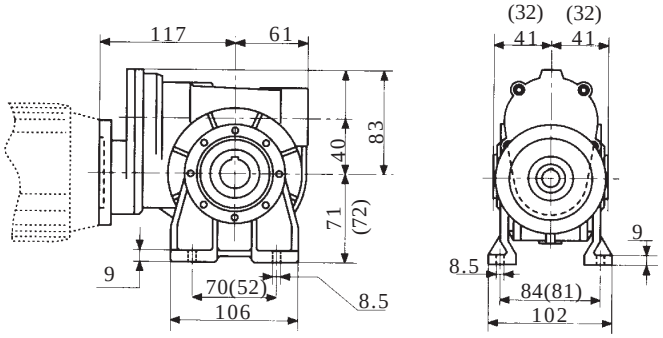

PRD 40/A (A1)

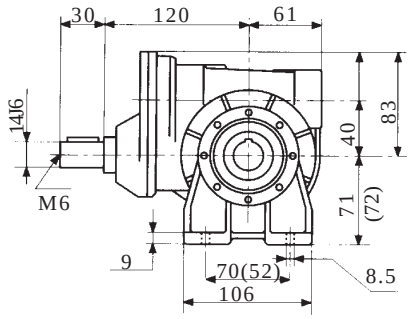

PFRD 40/B (B1)

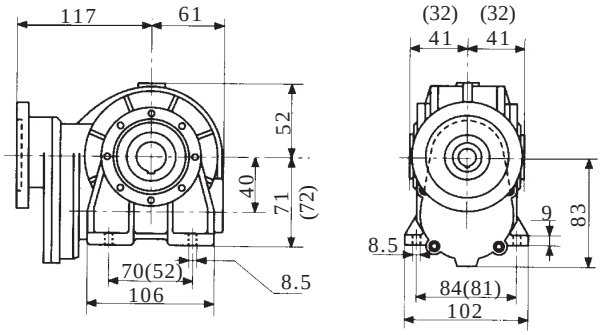

PRD 40/B (B1)

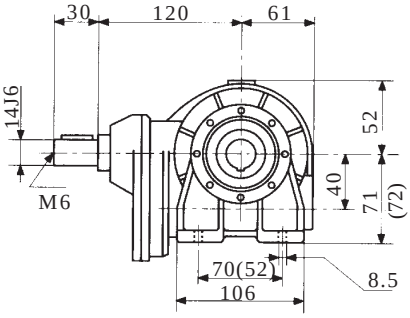

PFRD 40/V (V1)

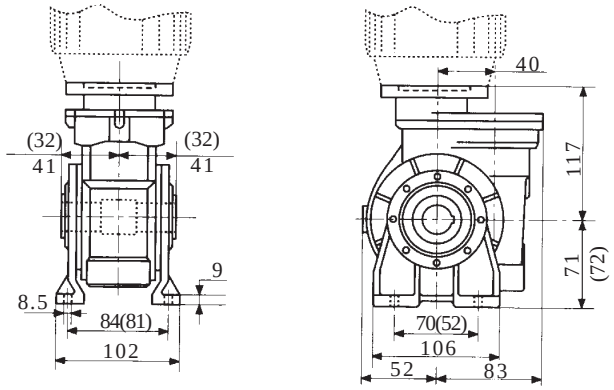

PRD 40/V (V1)

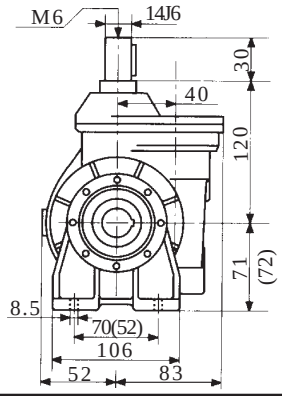

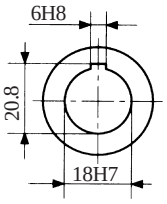

Standard Output Hollow Bore

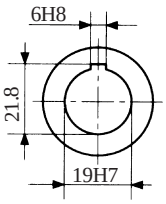

Optional Output Hollow Bore

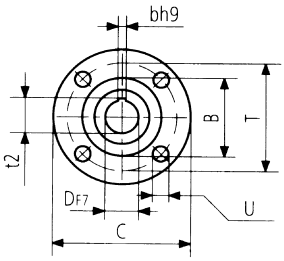

Motor Flange

Motor Flange Dimensions

	A - B - V	C	B	T	U	DF7	bh9	t2 +0.1 0
B5	56	120	80	100	7	9	3	10.4
	63	140	95	115	9.5	11	4	12.8
B14	56	80	50	65	5.5	9	3	10.4
	63	90	60	75	5.5	11	4	12.8

PFRD 40 FB

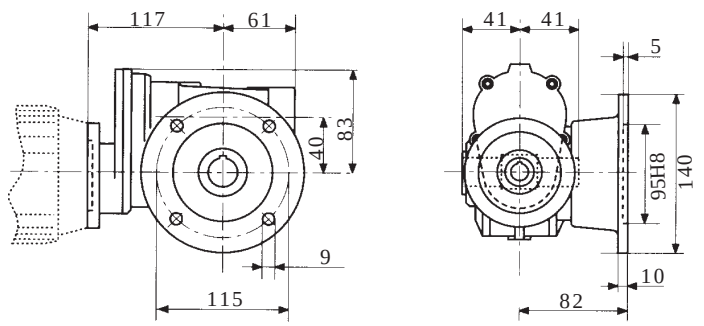

PRD 40 FB

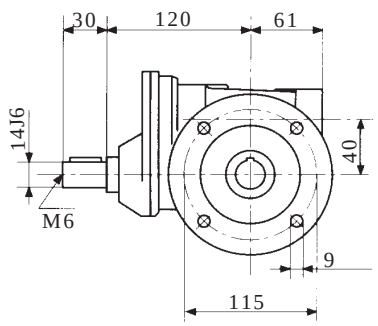

PFRD 40 FP

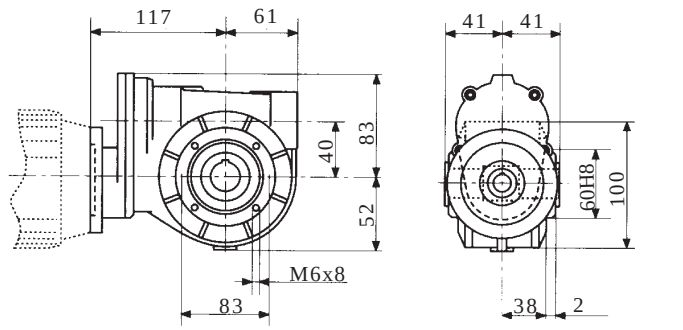

PRD 40 FP

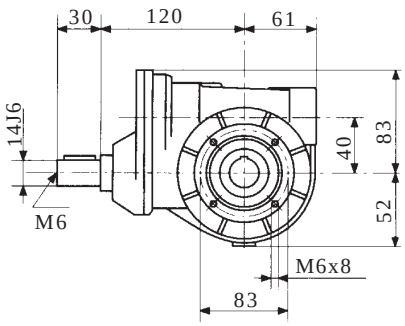

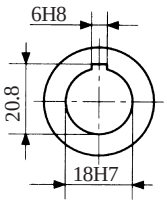

Standard Output Hollow Bore

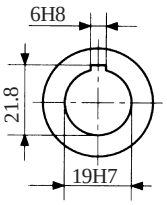

Optional Output Hollow Bore

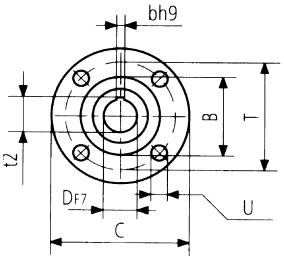

Motor Flange

Motor Flange Dimensions

	FB - FP	C	B	T	U	DF7	bh9	t2 +0.1 0
B5	56	120	80	100	7	9	3	10.4
	63	140	95	115	9.5	11	4	12.8

B14	56	80	50	65	5.5	9	3	10.4
	63	90	60	75	5.5	11	4	12.8

For Flange FB1-FB2-FB3-FB4-FB5
See dimensions on pages 14-15

For Flange FP1-FP2
See dimensions on page 16

PFRD 50/A (A1)

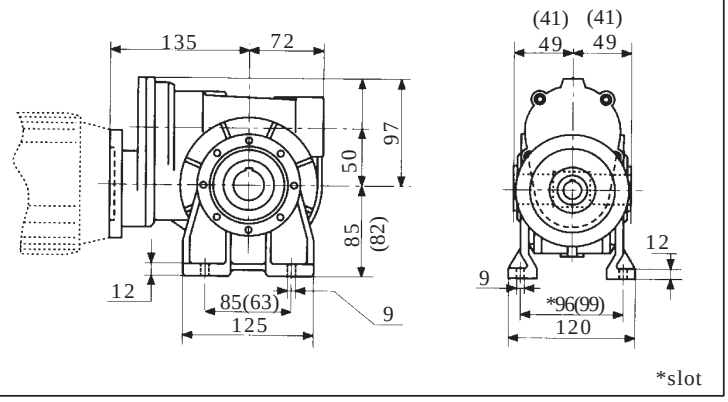

PRD 50/A (A1)

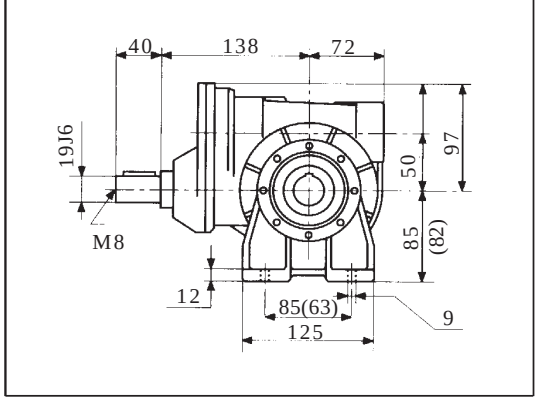

PFRD 50/B (B1)

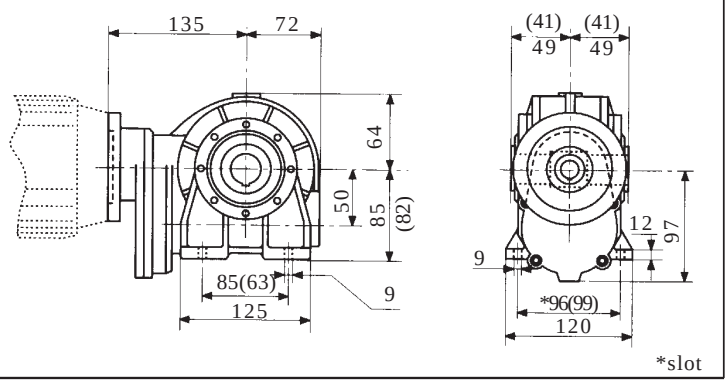

PRD 50/B (B1)

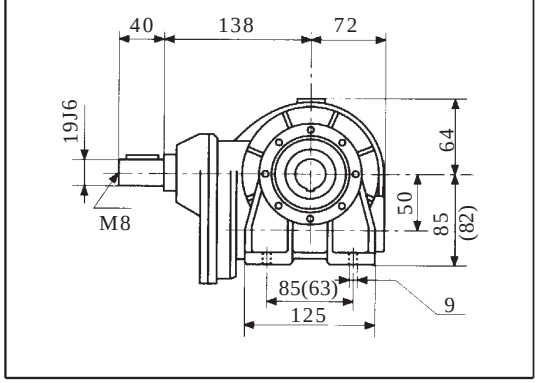

PFRD 50/V (V1)

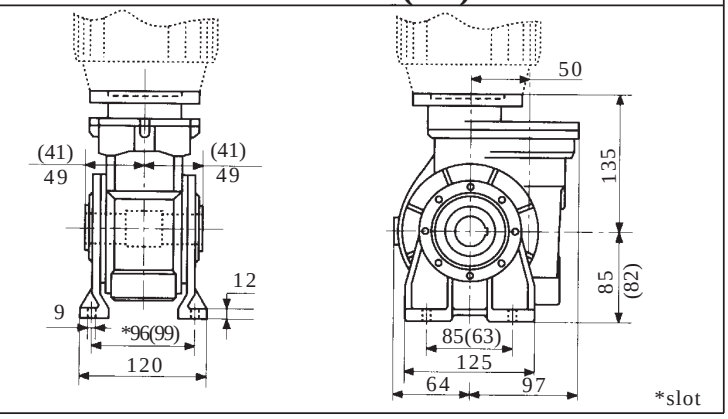

PRD 50/V (V1)

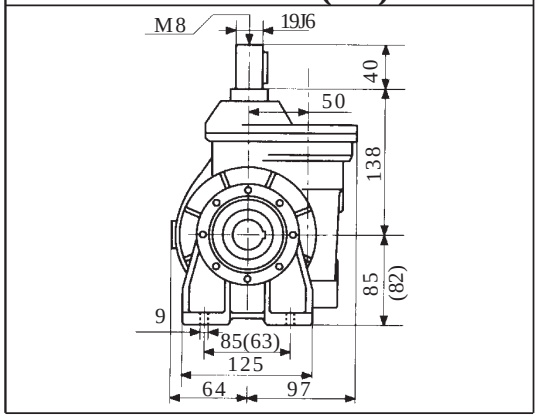

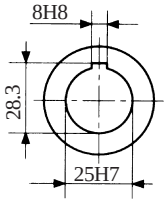

Standard Output Hollow Bore

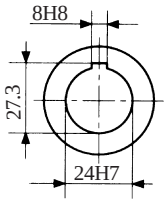

Optional Output Hollow Bore

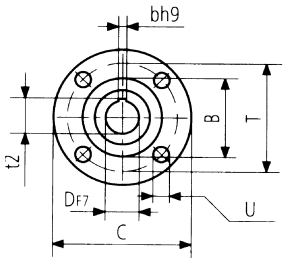

Motor Flange

Motor Flange Dimensions

	A - B - V	C	B	T	U	DF7	bh9	t2 ±0.1
B5	63	140	95	115	9.5	11	4	12.8
	71	160	110	130	9.5	14	5	16.3
B14	63	90	60	75	5.5	11	4	12.8
	71	105	70	85	7	14	5	16.3

PFRD 50 FB

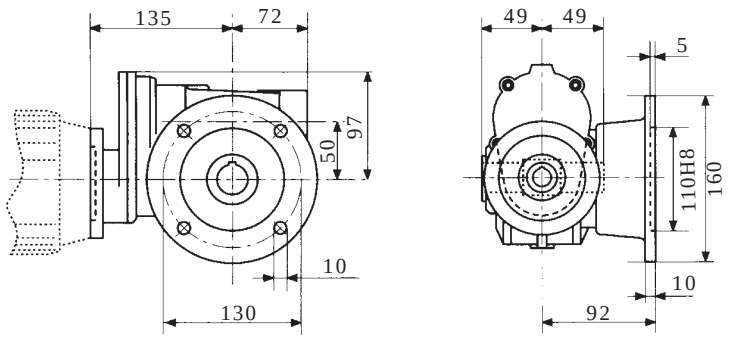

PRD 50 FB

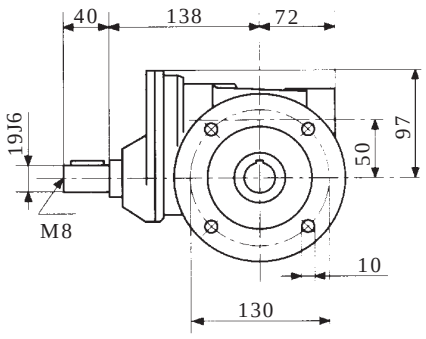

PFRD 50 FP

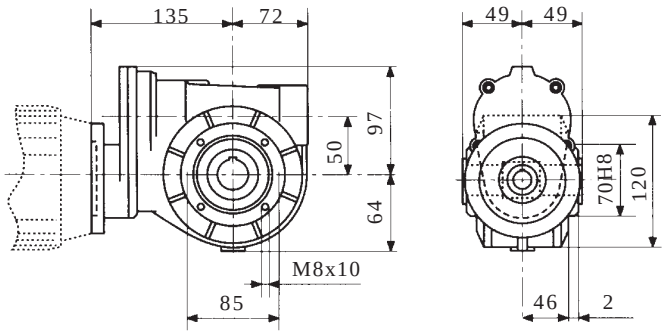

PRD 50 FP

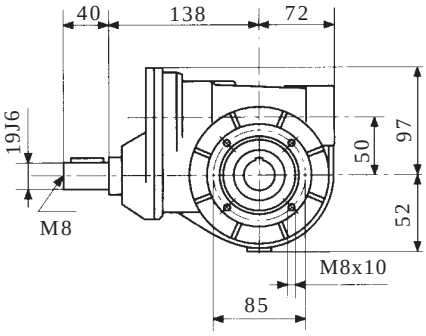

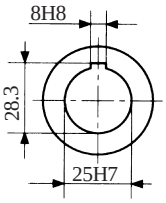

Standard Output Hollow Bore

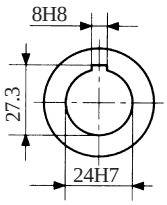

Optional Output Hollow Bore

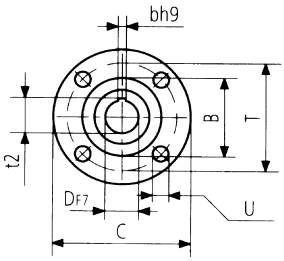

Motor Flange

Motor Flange Dimensions

	FB-FP	C	B	T	U	DF7	bh9	t2 +0,1 0
B5	63	140	95	115	9.5	11	4	12.8
	71	160	110	130	9.5	14	5	16.3

B14	63	90	60	75	5.5	11	4	12.8
	71	105	70	85	7	14	5	16.3

For Flange FB1-FB2-FB3-FB4-FB5-FB6
See dimensions on pages 18-19

For Flange FP1-FP2
See dimensions on page 20

PFRD 63/A (A1)

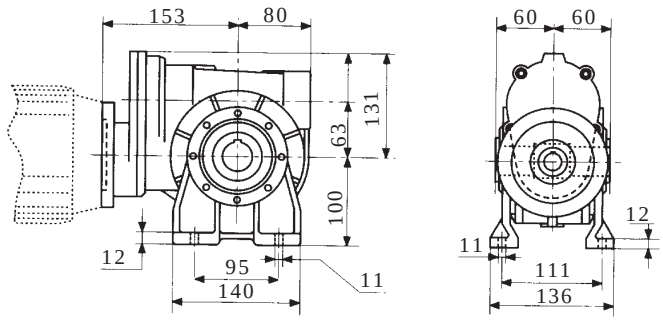

PRD 63/A (A1)

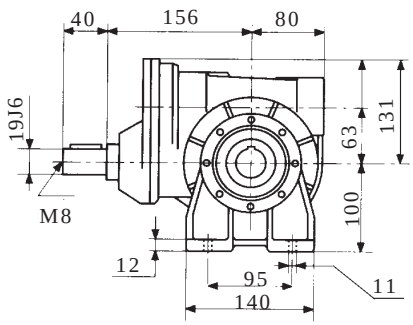

PFRD 63/B (B1)

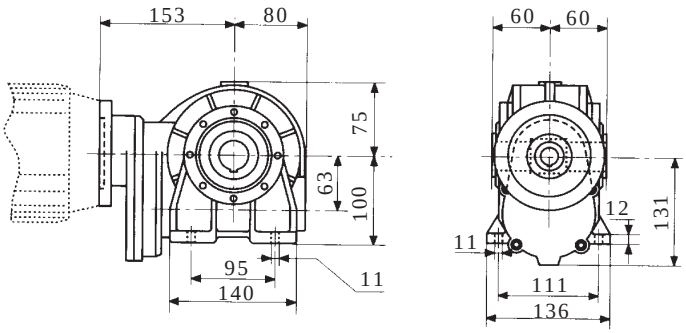

PRD 63/B (B1)

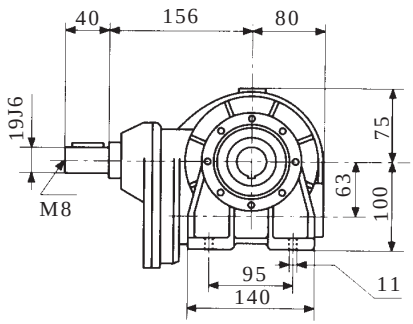

PFRD 63/V (V1)

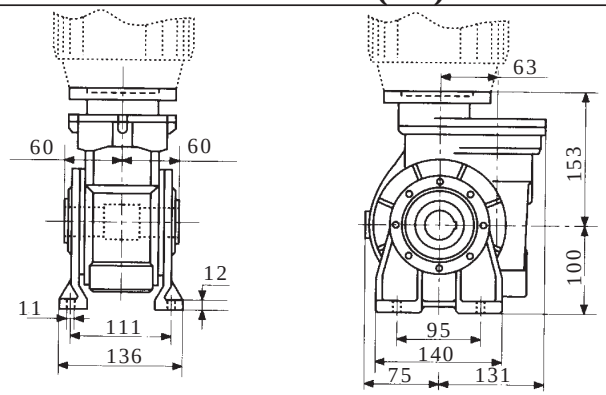

PRD 63/V (V1)

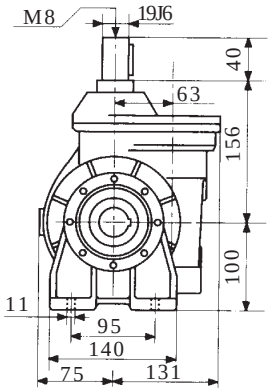

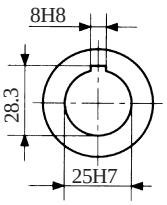

Standard Output Hollow Bore

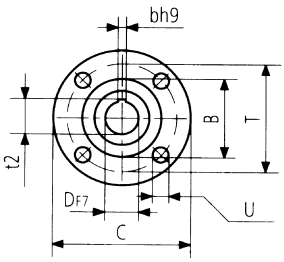

Motor Flange

Motor Flange Dimensions

	A - B - V	C	B	T	U	DF7	bh9	t2 +0.1 0
B5	71	160	110	130	9.5	14	5	16.3
B14	71	105	70	85	7	14	5	16.3
	80	120	80	100	7	19	6	21.8

PFRD 63 FB

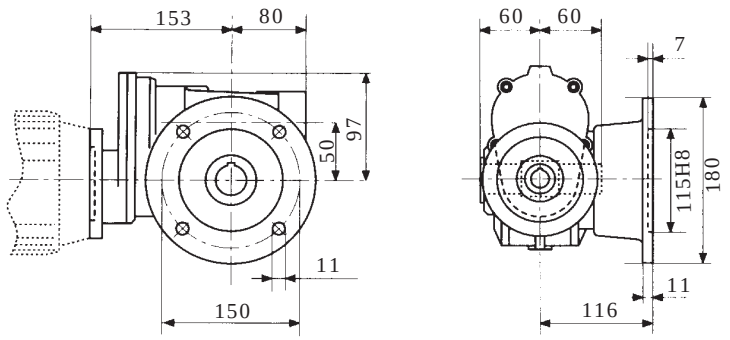

PRD 63 FB

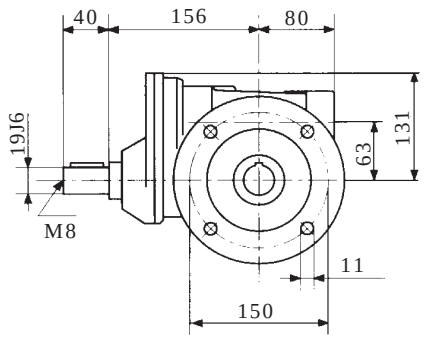

PFRD 63 FP

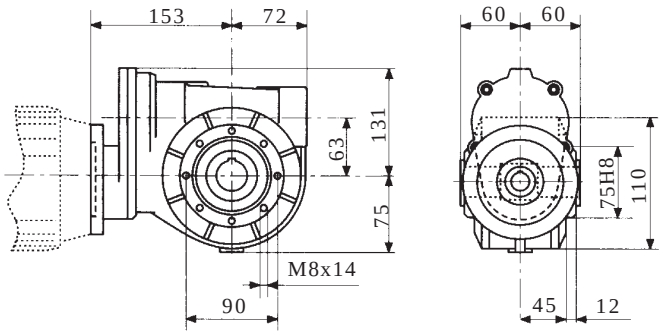

PRD 63 FP

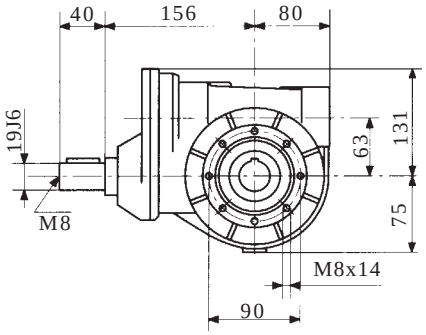

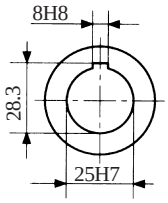

Standard Output Hollow Bore

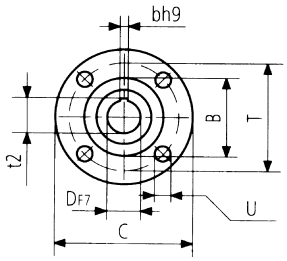

Motor Flange

Motor Flange Dimensions

	FB - FP	C	B	T	U	DF7	bh9	t2 +0,1
B5	71	160	110	130	9.5	14	5	16.3
B14	71	105	70	85	7	14	5	16.3
	80	120	80	100	7	19	6	21.8

For Flange FB1-FB2-FB3

See dimensions on page 22

PFRD 70/A (A1)

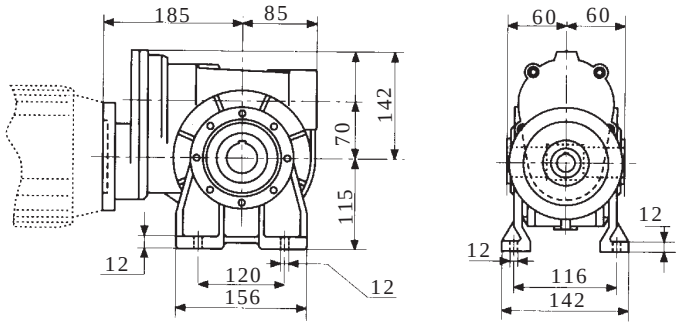

PRD 70/A (A1)

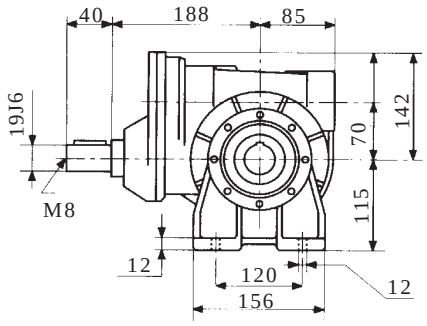

PFRD 70/B (B1)

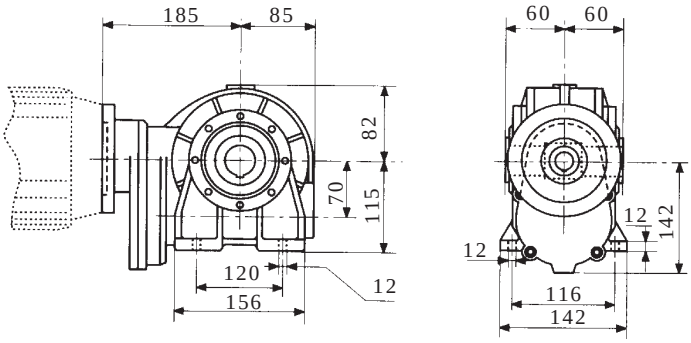

PRD 70/B (B1)

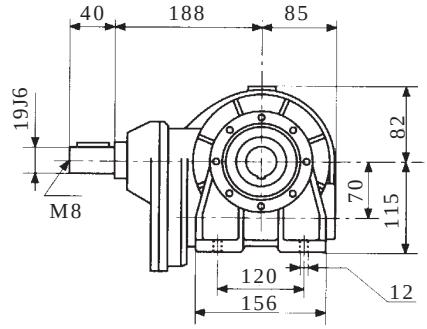

PFRD 70/V (V1)

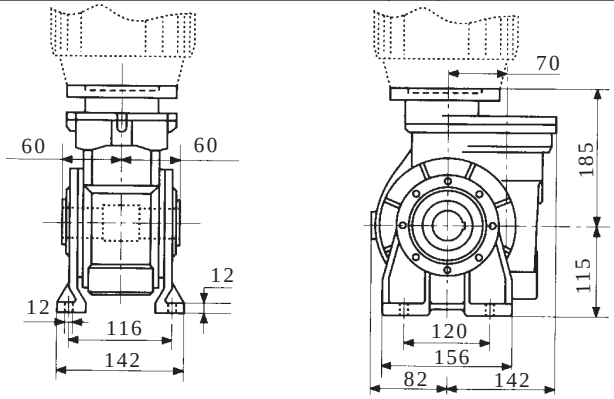

PRD 70/V (V1)

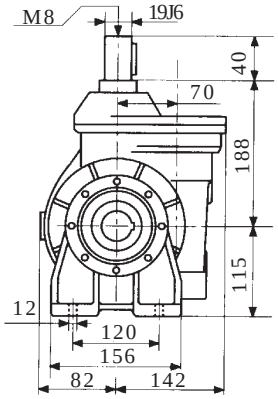

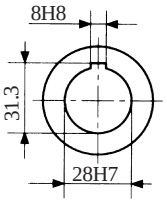

Standard Output Hollow Bore

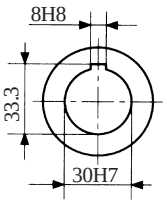

Optional Output Hollow Bore

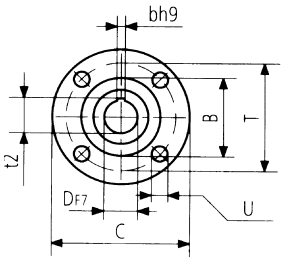

Motor Flange

Motor Flange Dimensions

	A - B - V	C	B	T	U	DF7	bh9	t2 ⁰ 0,1
B5	71	160	110	130	9.5	14	5	16.3
	80	200	130	165	11.5	19	6	21.8
	90	200	130	165	11.5	24	8	27.3

B14	80	120	80	100	7	19	6	21.8
	90	140	95	115	8.5	24	8	27.3

PFRD 70 FB

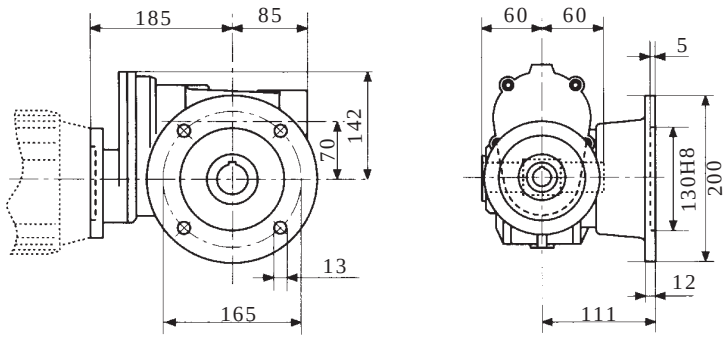

PRD 70 FB

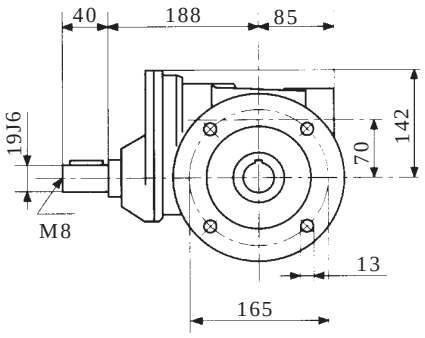

PFRD 70 FP

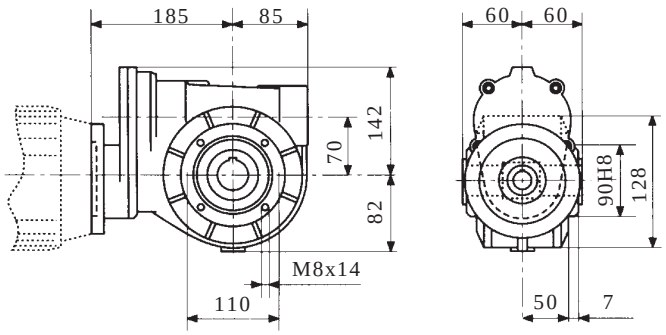

PRD 70 FP

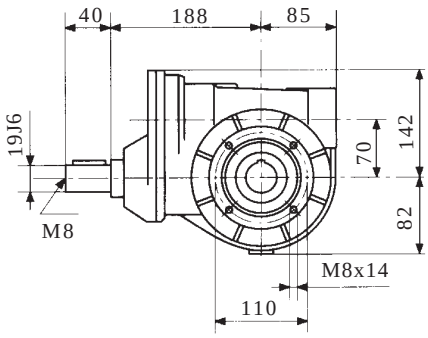

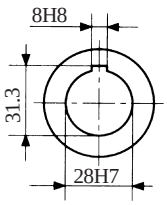

Standard Output Hollow Bore

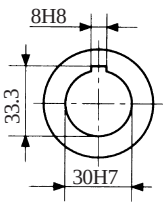

Optional Output Hollow Bore

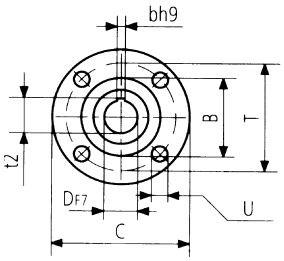

Motor Flange

Motor Flange Dimensions

	FB-FP	C	B	T	U	DF7	bh9	t2 +0,1 0
B5	71	160	110	130	9.5	14	5	16.3
	80	200	130	165	11.5	19	6	21.8
	90	200	130	165	11.5	24	8	27.3

B14	80	120	80	100	7	19	6	21.8
	90	140	95	115	8.5	24	8	27.3

For Flange FB1-FB2-FB3-FB3A-FB4

See dimensions on pages 25-26

PFRD 85/A (A1)

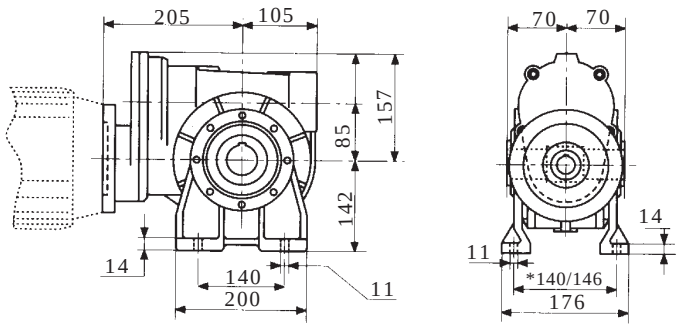

*slot

PRD 85/A (A1)

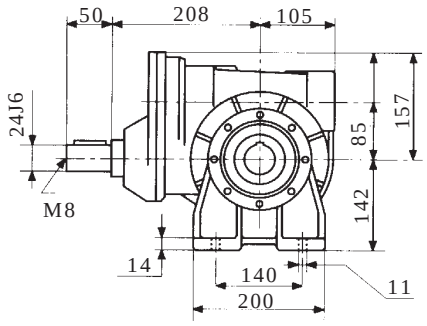

PFRD 85/B (B1)

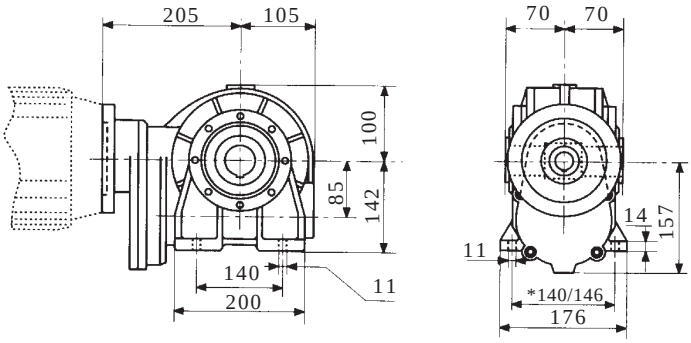

*slot

PRD 85/B (B1)

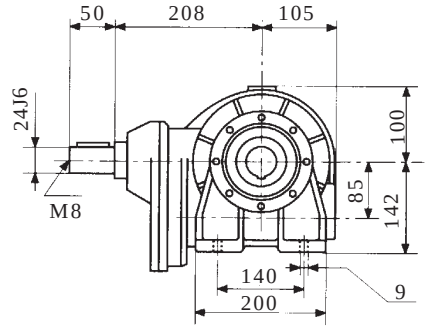

PFRD 85/V (V1)

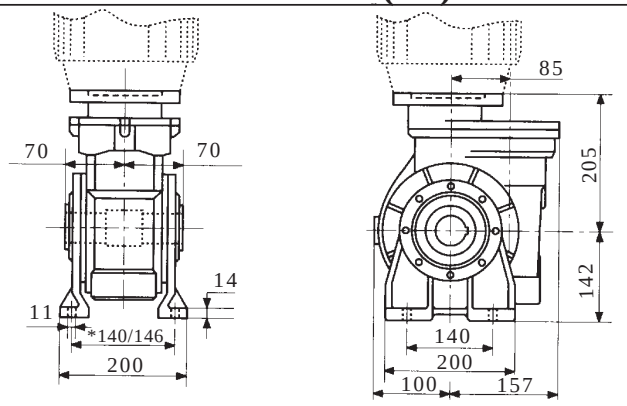

*slot

PRD 85/V (V1)

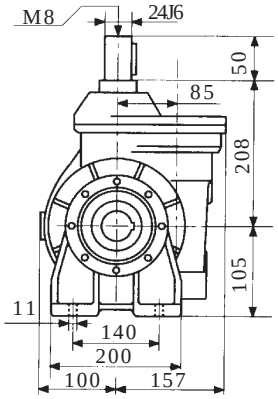

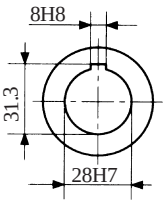

Standard Output Hollow Bore

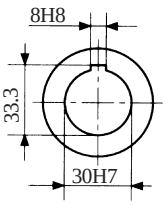

Optional Output Hollow Bore

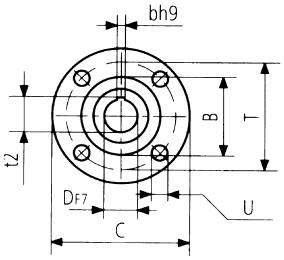

Motor Flange

Motor Flange Dimensions

	A - B - V	C	B	T	U	DF7	bh9	t2 ⁰ 0.1
B5	71	160	110	130	9.5	14	5	16.3
	80	200	130	165	11.5	19	6	21.8
	90	200	130	165	11.5	24	8	27.3
B14	80	120	80	100	7	19	6	21.8
	90	140	95	115	8.5	24	8	27.3

PFRD 85 FB

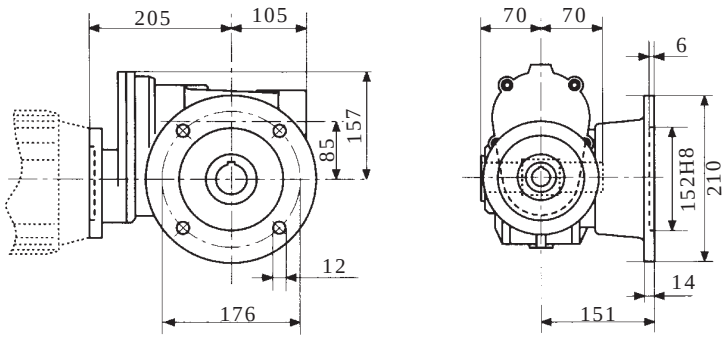

PRD 85 FB

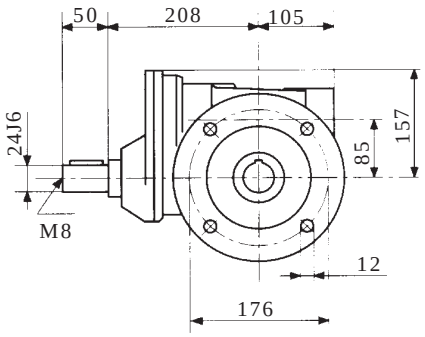

PFRD 85 FP

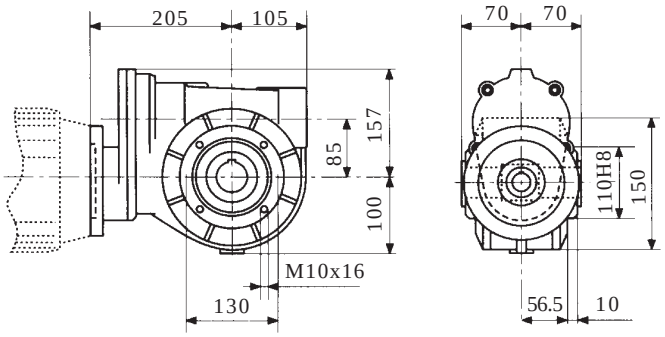

PRD 85 FP

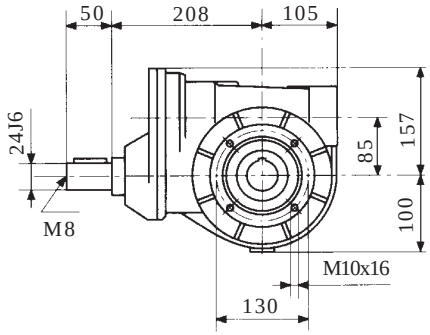

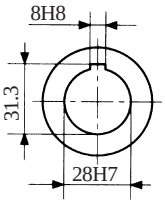

Standard Output Hollow Bore

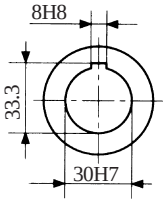

Optional Output Hollow Bore

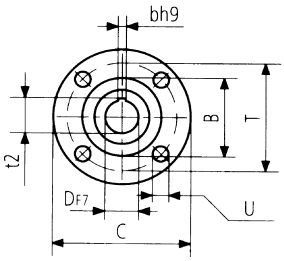

Motor Flange

Motor Flange Dimensions

	FB-FP	C	B	T	U	DF7	bh9	t2 +0,1 0
B5	71	160	110	130	9.5	14	5	16.3
	80	200	130	165	11.5	19	6	21.8
	90	200	130	165	11.5	24	8	27.3

B14	80	120	80	100	7	19	6	21.8
	90	140	95	115	8.5	24	8	27.3

For Flange FBA-FB1-FB1A-FB2

See dimensions on page 28-29

4.4 PERFORMANCE OF REDUCTION GEARS

PRD 40

ic x i	itc	n1	n2	M1	KW	HP	Rd
3x15	45	1400	31	70	0.30	0.41	0.76
3x20	60		23.3	71	0.24	0.33	0.72
3x30	90		15.6	77	0.20	0.27	0.63
3x40	120		11.6	83	0.18	0.25	0.56
3x50	150		9.3	83	0.15	0.20	0.54
3x60	180		7.8	74	0.12	0.16	0.50
3x70	210		6.7	65	0.10	0.14	0.46
3x80	240		5.8	53	0.08	0.11	0.40
3x100	300		4.7	46	0.06	0.08	0.38

PRD 50

ic x i	itc	n1	n2	M1	KW	HP	Rd
3x15	45	2800	62	87	0.72	0.98	0.78
3x20	60		46.7	85	0.57	0.78	0.73
3x30	90		31	93	0.46	0.62	0.66
3x40	120		23.3	89	0.35	0.47	0.62
3x50	150		18.7	90	0.30	0.40	0.59
3x60	180		15.6	82	0.25	0.34	0.54
3x70	210		13.3	70	0.20	0.27	0.49
3x80	240		11.7	60	0.16	0.22	0.46
3x100	300		9.3	60	0.14	0.19	0.42

PRD 50

ic x i	itc	n1	n2	M1	KW	HP	Rd
3x15	45	1400	31	90	0.39	0.53	0.75
3x20	60		23.3	89	0.31	0.42	0.70
3x30	90		15.6	97	0.26	0.35	0.61
3x40	120		11.6	101	0.22	0.30	0.56
3x50	150		9.3	98	0.18	0.25	0.53
3x60	180		7.8	86	0.14	0.19	0.50
3x70	210		6.7	80	0.12	0.16	0.47
3x80	240		5.8	65	0.09	0.12	0.44
3x100	300		4.7	65	0.08	0.11	0.40

PRD 50

ic x i	itc	n1	n2	M1	KW	HP	Rd
3x15	45	900	20	104	0.30	0.40	0.73
3x20	60		15	117	0.27	0.36	0.68
3x30	90		10	116	0.20	0.27	0.61
3x40	120		7.5	121	0.17	0.23	0.56
3x50	150		6	105	0.13	0.18	0.51
3x60	180		5	98	0.11	0.15	0.47
3x70	210		4.3	93	0.10	0.13	0.42
3x80	240		3.8	69	0.07	0.09	0.39
3x100	300		3	67	0.06	0.08	0.35

PRD 63

ic x i	itc	n1	n2	M1	KW	HP	Rd
3x15	45	2800	62	151	1.23	1.67	0.80
3x20	60		46.7	152	0.97	1.32	0.77
3x25	75		37	157	0.83	1.13	0.74
3x30	90		31	161	0.75	1	0.70
3x35	105		26.7	163	0.68	0.92	0.67
3x40	120		23.3	165	0.62	0.84	0.65
3x45	135		20.8	157	0.56	0.76	0.61
3x50	150		18.7	137	0.47	0.64	0.57
3x60	180		15.6	134	0.40	0.54	0.55
3x70	210		13.3	128	0.35	0.47	0.51
3x80	240		11.7	120	0.30	0.41	0.49
3x100	300		9.3	119	0.27	0.37	0.43

PRD 63

ic x i	itc	n1	n2	M1	KW	HP	Rd
3x15	45	1400	31	175	0.74	1	0.77
3x20	60		23.3	188	0.62	0.84	0.74
3x25	75		18.7	192	0.53	0.72	0.71
3x30	90		15.6	202	0.50	0.68	0.66
3x35	105		13.3	203	0.44	0.60	0.64
3x40	120		11.6	192	0.39	0.53	0.60
3x45	135		10.4	181	0.34	0.46	0.58
3x50	150		9.3	169	0.30	0.40	0.55
3x60	180		7.8	159	0.25	0.34	0.52
3x70	210		6.7	146	0.21	0.28	0.49
3x80	240		5.8	133	0.18	0.24	0.45
3x100	300		4.7	122	0.15	0.20	0.40

PRD 63

ic x i	itc	n1	n2	M1	KW	HP	Rd
3x15	45	900	20	193	0.54	0.73	0.75
3x20	60		15	201	0.44	0.60	0.72
3x25	75		12	208	0.38	0.52	0.69
3x30	90		10	222	0.37	0.50	0.63
3x35	105		8.6	206	0.31	0.42	0.60
3x40	120		7.5	199	0.27	0.36	0.58
3x45	135		6.7	192	0.25	0.34	0.54
3x50	150		6	175	0.22	0.30	0.50
3x60	180		5	170	0.19	0.26	0.47
3x70	210		4.3	156	0.16	0.22	0.44
3x80	240		3.8	144	0.14	0.19	0.41
3x100	300		3	126	0.11	0.15	0.36

PRD 70

ic x i	itc	n1	n2	M1	KW	HP	Rd
3x15	45	2800	62	224	1.80	2.4	0.81
3x20	60		46.7	223	1.4	1.9	0.78
3x25	75		37	216	1.1	1.5	0.76
3x30	90		31	216	1	1.36	0.70
3x35	105		26.7	220	0.92	1.25	0.67
3x40	120		23.3	234	0.88	1.2	0.65
3x45	135		20.8	222	0.77	1.05	0.63
3x50	150		18.7	212	0.68	0.92	0.61
3x60	180		15.6	192	0.55	0.75	0.57
3x70	210		13.3	171	0.45	0.62	0.53
3x80	240		11.7	155	0.38	0.52	0.50
3x100	300		9.3	149	0.33	0.45	0.44

PRD 70

ic x i	itc	n1	n2	M1	KW	HP	Rd
3x15	45	1400	31	276	1.15	1.56	0.78
3x20	60		23.3	276	0.90	1.22	0.75
3x25	75		18.7	276	0.75	1	0.72
3x30	90		15.6	287	0.70	0.95	0.67
3x35	105		13.3	285	0.62	0.84	0.64
3x40	120		11.6	276	0.55	0.75	0.61
3x45	135		10.4	234	0.44	0.60	0.58
3x50	150		9.3	230	0.40	0.55	0.56
3x60	180		7.8	227	0.35	0.48	0.53
3x70	210		6.7	198	0.29	0.40	0.48
3x80	240		5.8	185	0.25	0.34	0.45
3x100	300		4.7	170	0.21	0.28	0.40

PRD 70

ic x i	itc	n1	n2	M1	KW	HP	Rd
3x15	45	900	20	308	0.85	1.16	0.76
3x20	60		15	307	0.66	0.9	0.73
3x25	75		12	306	0.55	0.75	0.70
3x30	90		10	306	0.50	0.68	0.64
3x35	105		8.6	305	0.45	0.61	0.61
3x40	120		7.5	295	0.40	0.54	0.58
3x45	135		6.7	279	0.35	0.48	0.56
3x50	150		6	270	0.32	0.44	0.53
3x60	180		5	257	0.27	0.37	0.50
3x70	210		4.3	255	0.25	0.34	0.46
3x80	240		3.8	237	0.22	0.3	0.43
3x100	300		3	205	0.17	0.23	0.38

PRD 85							
ic x i	itc	n1	n2	M1	KW	HP	Rd
3x15	45	2800	62	330	2.65	3.6	0.81
3x20	60		46.7	303	1.85	2.5	0.80
3x25	75		37	318	1.65	2.25	0.78
3x30	90		31	366	1.58	2.15	0.72
3x35	105		26.7	343	1.35	1.84	0.71
3x40	120		23.3	367	1.30	1.77	0.69
3x45	135		20.8	347	1.13	1.54	0.67
3x50	150		18.7	315	0.95	1.3	0.65
3x60	180		15.6	304	0.80	1.1	0.62
3x70	210		13.3	296	0.70	0.95	0.59
3x80	240		11.7	279	0.60	0.82	0.57
3x100	300		9.3	241	0.46	0.63	0.51

PRD 85							
ic x i	itc	n1	n2	M1	KW	HP	Rd
3x15	45	1400	31	401	1.65	2.25	0.79
3x20	60		23.3	395	1.25	1.70	0.77
3x25	75		18.7	397	1.05	1.40	0.74
3x30	90		15.6	416	1	1.36	0.68
3x35	105		13.3	403	0.85	1.16	0.66
3x40	120		11.6	400	0.76	1	0.64
3x45	135		10.4	387	0.68	0.92	0.62
3x50	150		9.3	369	0.60	0.82	0.60
3x60	180		7.8	355	0.50	0.68	0.58
3x70	210		6.7	323	0.42	0.57	0.54
3x80	240		5.8	310	0.37	0.50	0.51
3x100	300		4.7	300	0.32	0.43	0.46

PRD 85							
ic x i	itc	n1	n2	M1	KW	HP	Rd
3x15	45	900	20	417	1.15	1.56	0.76
3x20	60		15	424	0.9	1.22	0.74
3x25	75		12	424	0.75	1	0.71
3x30	90		10	440	0.72	0.98	0.64
3x35	105		8.6	433	0.62	0.84	0.63
3x40	120		7.5	426	0.54	0.73	0.62
3x45	135		6.7	419	0.49	0.67	0.60
3x50	150		6	408	0.45	0.61	0.57
3x60	180		5	392	0.38	0.52	0.54
3x70	210		4.3	355	0.32	0.43	0.50
3x80	240		3.8	323	0.28	0.38	0.46
3x100	300		3	310	0.25	0.34	0.39

4.5 PERFORMANCE OF MOTOR REDUCTION GEARS

KW 0.09			HP 0.12			
itc	n1	n2	M1'	FG	PFRD	iEC
90	1400	15.6	35	2.2	**40**	**56**
120		11.6	41	2	"	"
150		9.3	50	1.6	"	"
180		7.8	55	1.3	"	"
210		6.7	59	1.1	"	"
240		5.8	59	0.9	"	"
60	900	15	38	3	**50**	**63**
90		10	52	2.2	"	"
120		7.5	64	1.8	"	"
150		6	73	1.4	"	"
180		5	81	1.2	"	"
210		4.3	84	1.1	"	"
240		3.8	88	0.8	"	"

KW 0.12			HP 0.18			
itc	n1	n2	M1'	FG	PFRD	iEC
60	1400	23.3	35	2	**40**	**63**
90		15.6	46	1.7	"	"
120		11.6	55	1.5	"	"
150		9.3	66	1.25	"	"
180		7.8	73	1	"	"
210		6.7	78	0.85	"	"
45		31	28	3.2	**50**	"
60		23.3	35	2.6	"	"
90		15.6	45	2.1	"	"
120		11.6	55	1.8	"	"
150		9.3	66	1.5	"	"
180		7.8	74	1.2	"	"
210		6.7	80	1	"	"
45	900	20	42	2.5	**50**	**63**
60		15	52	2.2	"	"
90		10	70	1.7	"	"
120		7.5	85	1.4	"	"
150		6	97	1.1	"	"
180		5	108	0.9	"	"
210		4.3	112	0.8	"	"

KW 0.18			HP 0.25			
itc	n1	n2	M1'	FG	PFRD	iEC
120	2800	23.3	46	1.9	**50**	**63**
150		18.7	54	1.6	"	"
180		15.6	59	1.4	"	"
210		13.3	63	1.1	"	"
240		11.7	67	0.9	"	"
45	1400	31	42	1.6	**40**	**63**
60		23.3	53	1.3	"	"
90		15.6	69	1.1	"	"
120		11.6	83	1	"	"
45		31	41	2.2	**50**	"
60		23.3	52	1.7	"	"
90		15.6	67	1.4	"	"
120		11.6	83	1.2	"	"
150		9.3	98	1	"	"
45	900	20	63	1.6	**50**	**71**
60		15	78	1.5	"	"
90		10	105	1.1	"	"
120		7.5	128	0.9	"	"
60		15	83	2.4	**63**	"
75		12	98	2.1	"	"
90		10	108	2	"	"
105		8.6	120	1.7	"	"

KW 0.18			HP 0.25			
itc	n1	n2	M1'	FG	PFRD	iEC
120	900	7.5	133	1.5	**63**	**71**
135		6.7	138	1.4	"	"
150		6	143	1.2	"	"
180		5	161	1	"	"
210		4.3	176	0.9	"	"
75		12	100	3	**70**	"
90		10	110	2.8	"	"
105		8.6	122	2.5	"	"
120		7.5	133	2.2	"	"
135		6.7	144	1.9	"	"
150		6	152	1.7	"	"
180		5	172	1.5	"	"
210		4.3	184	1.4	"	"
240		3.8	194	1.2	"	"
300		3	218	1	"	"
120		7.5	142	3	**85**	"
135		6.7	154	2.7	"	"
150		6	163	2.5	"	"
180		5	186	2.1	"	"
210		4.3	200	1.8	"	"
240		3.8	208	1.6	"	"
300		3	223	1.4	"	"

WORM SCREW REDUCTION GEARS AND MOTOR REDUCTION GEARS

KW 0.25				HP 0.35		
itc	n1	n2	M1'	FG	PFRD	iEC
45	1400	31	57	1.6	**50**	**71**
60		23.3	71	1.2	"	"
90		15.6	93	1	"	"
120		11.6	115	0.9	"	"
45		31	59	3	**63**	"
60		23.3	75	2.5	"	"
75		18.7	90	2.1	"	"
90		15.6	101	2	"	"
105		13.3	114	1.8	"	"
120		11.6	123	1.6	"	"
135		10.4	133	1.4	"	"
150		9.3	141	1.2	"	"
180		7.8	159	1	"	"
75		18.7	92	3	**70**	"
90		15.6	102	2.8	"	"
105		13.3	115	2.5	"	"
120		11.6	125	2.2	"	"
135		10.4	133	1.8	"	"
150		9.3	144	1.6	"	"
180		7.8	162	1.4	"	"
210		6.7	171	1.2	"	"
240		5.8	185	1	"	"
120		11.6	132	3	**85**	"
135		10.4	142	2.7	"	"
150		9.3	154	2.4	"	"
180		7.8	177	2	"	"
210		6.7	192	1.7	"	"
240		5.8	210	1.5	"	"
300		4.7	233	1.3	"	"
45	900	20	89	2.1	**63**	**71**
60		15	114	1.8	"	"
75		12	137	1.5	"	"
90		10	150	1.5	"	"
105		8.6	166	1.2	"	"
120		7.5	184	1.1	"	"
135		6.7	192	1	"	"
45		20	91	3.4	**70**	"
60		15	116	2.6	"	"
75		12	139	2.2	"	"
90		10	153	2	"	"
105		8.6	169	1.8	"	"
120		7.5	185	1.6	"	"
135		6.7	199	1.4	"	"
150		6	210	1.3	"	"
180		5	238	1.1	"	"
210		4.3	255	1	"	"
240		3.8	270	0.9	"	"
120		7.5	197	2.1	**85**	"
135		6.7	213	2	"	"
150		6	227	1.8	"	"
180		5	257	1.5	"	"
210		4.3	277	1.3	"	"
240		3.8	289	1.1	"	"
300		3	310	1	"	"

KW 0.37				HP 0.50		
itc	n1	n2	M1'	FG	PFRD	iEC
45	1400	31	87	2	**63**	**71**
60		23.3	112	1.7	"	"
75		18.7	134	1.4	"	"
90		15.6	149	1.3	"	"
105		13.3	170	1.2	"	"
120		11.6	182	1	"	"
75		18.7	136	2	**70**	"
90		15.6	151	1.9	"	"
105		13.3	170	1.6	"	"
120		11.6	185	1.5	"	"
135		10.4	197	1.2	"	"
150		9.3	212	1.1	"	"
180		7.8	240	0.9	"	"
60		23.3	116	3.4	**85**	"
75		18.7	140	2.8	"	"
90		15.6	154	2.7	"	"
105		13.3	175	2.3	"	"
120		11.6	195	2	"	"
135		10.4	210	1.8	"	"
150		9.3	228	1.6	"	"
180		7.8	263	1.4	"	"
210		6.7	285	1.1	"	"
240		5.8	310	1	"	"
300		4.7	346	0.9	"	"
45	900	20	132	1.4	**63**	**80**
60		15	170	1.2	"	"
75		12	203	1	"	"
90		10	223	1	"	"
45		20	135	2.3	**70**	"
60		15	172	1.8	"	"
75		12	206	1.5	"	"
90		10	226	1.3	"	"
105		8.6	250	1.2	"	"
120		7.5	273	1.1	"	"
135		6.7	295	0.9	"	"
75		12	209	2	**85**	"
90		10	226	1.9	"	"
105		8.6	258	1.7	"	"
120		7.5	292	1.5	"	"
135		6.7	316	1.3	"	"
150		6	335	1.2	"	"
180		5	382	1	"	"

KW 0.55				HP 0.75		
itc	n1	n2	M1'	FG	PFRD	iEC
45	1400	31	132	2.1	**70**	**80**
60		23.3	169	1.6	"	"
75		18.7	202	1.4	"	"
90		15.6	225	1.3	"	"
105		13.3	252	1.1	"	"
120		11.6	276	1	"	"
45		31	134	3	**85**	"
60		23.3	173	2.3	"	"
75		18.7	208	1.9	"	"
90		15.6	229	1.8	"	"
105		13.3	260	1.5	"	"
120		11.6	290	1.4	"	"
135		10.4	313	1.2	"	"
150		9.3	339	1.1	"	"
180		7.8	390	0.9	"	"
45	900	20	199	1.5	**70**	"
60		15	255	1.2	"	"
75		12	306	1	"	"
90		10	336	0.9	"	"
45		20	200	2.1	**85**	"
60		15	259	1.6	"	"
75		12	311	1.4	"	"
90		10	336	1.3	"	"
105		8.6	385	1.1	"	"
120		7.5	434	1	"	"

KW 0.75				HP 1.00		
itc	n1	n2	M1'	FG	PFRD	iEC
45	1400	31	180	1.5	**70**	**80**
60		23.3	230	1.2	"	"
75		18.7	275	1	"	"
90		15.6	307	0.9	"	"
45		31	183	2.2	**85**	"
60		23.3	236	1.7	"	"
75		18.7	283	1.4	"	"
90		15.6	312	1.3	"	"
105		13.3	355	1.1	"	"
120		11.6	395	1	"	"
135		10.4	427	0.9	"	"
45	900	20	272	1.5	**85**	**90**
60		15	353	1.2	"	"
75		12	424	1	"	"

KW 1.1				HP 1.5		
itc	n1	n2	M1'	FG	PFRD	iEC
45	1400	31	264	1	**70**	**90**
45		31	268	1.5	**85**	"
60		23.3	347	1.2	"	"
75		18.7	416	1	"	"
90		15.6	458	0.9	"	"

KW 1.5				HP 2.0		
itc	n1	n2	M1'	FG	PFRD	iEC
45	1400	31	365	1.1	**85**	**90**

INDUSTRIAL MOTORS

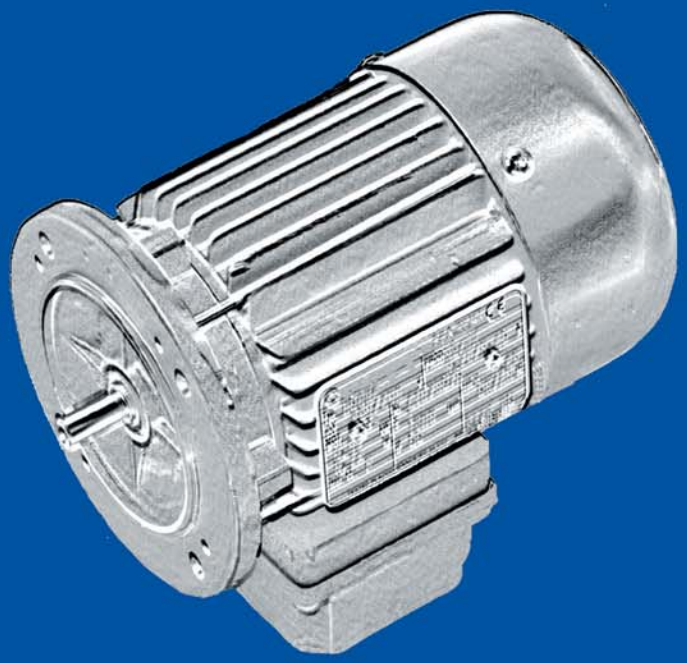

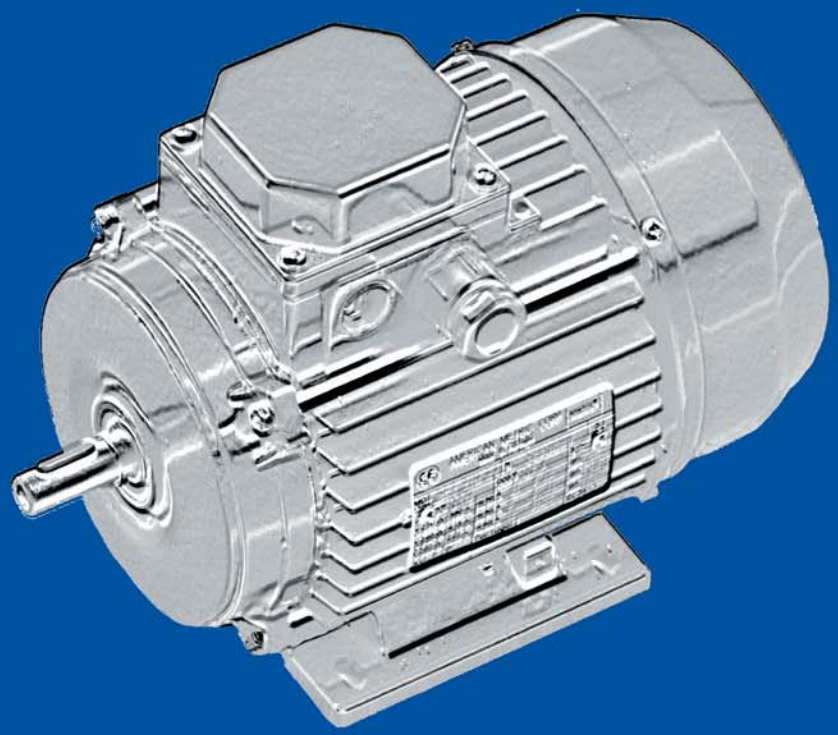

5.0 METRIC IEC STANDARD MOTORS

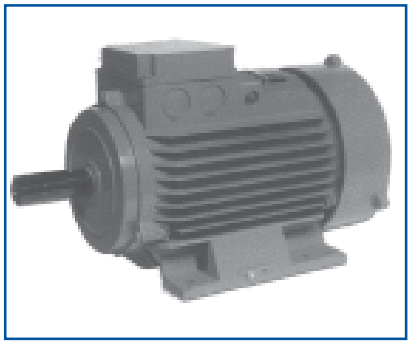
Three-Phase Aluminum Frame

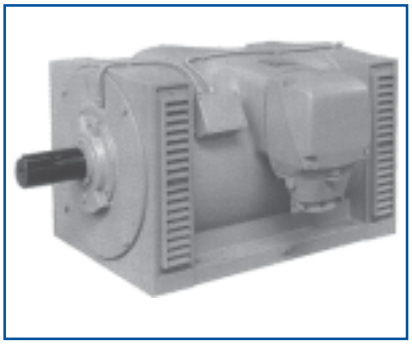
Drip Proof Motors

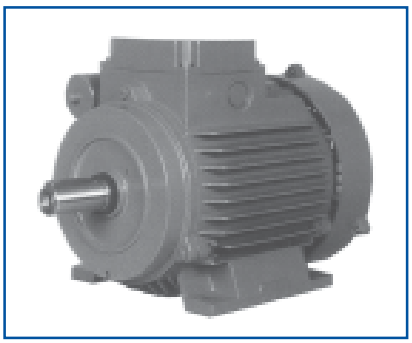
Single Phase Motors

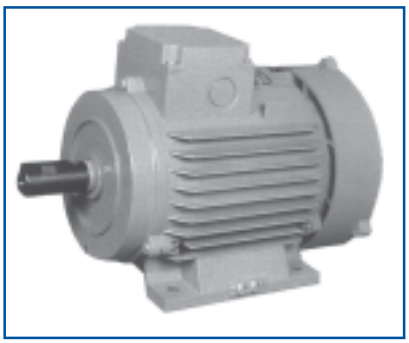
Increased Safety Motors

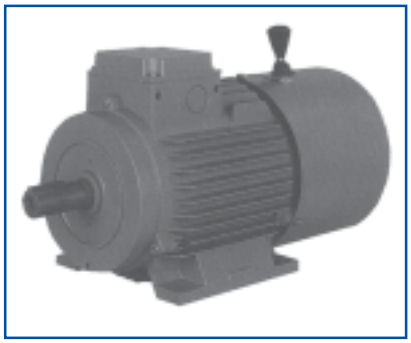
Brake Motors

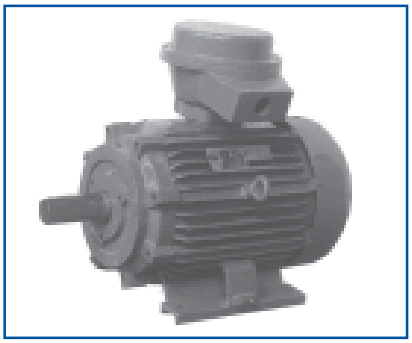
Flame Proof Motors

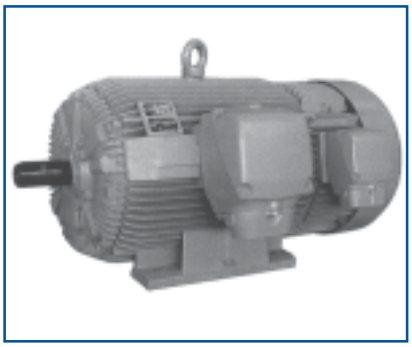
Slip Ring Motors

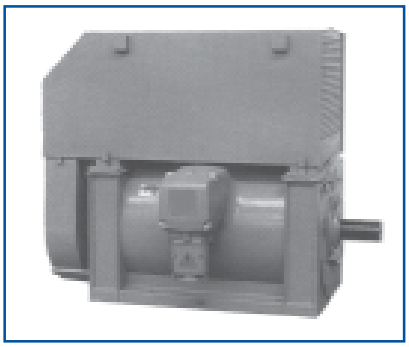
Squirrel Cage with Air/Air Exchanger

TOTALLY ENCLOSED FAN-COOLED THREE-PHASE, SQUIRREL-CAGE MOTORS

LOW VOLTAGE

5.1 OUTPUT RANGE

The present catalog deals with TEFC, three-phase, squirrel cage induction motors (Series BF) with shaft heights from 71 up to 400 mm, in the following ranges:

0.37 up to 500 kW - 3000 rpm
0.185 up to 500 kW - 1500 rpm
0.12 up to 400 kW - 1000 rpm
0.09 up to 315 kW - 750 rpm

For either higher output and larger size motors and/or other speeds or voltages, please contact our Special Products Department.

5.2 STANDARDS

•DIMENSIONAL STANDARDS

The main dimensions of our BF series TEFC motors are according to IEC 72-1 (1991) that refers:

- the dimensions of foot-mounted motors,
- the dimensions of mounting flanges,
- the shaft extension dimensions,
- the preferred output values.

•INTERCHANGEABILITY STANDARDS

BF series TEFC motors are in accordance with CENELEC harmonization document HD 231 and also with most national interchangeability standards.

•QUALITY STANDARDS

The rating and performance of BF series TEFC motors meet the standards laid down in IEC 34-1 (1983). Their performances are also in accordance with most national standards specifically VDE 0530, NBN C 51-101, NF C 51-111. If required, the performances of BF motors may be changed and thereby adapted to special requirements or other national standards.

5.3 GENERAL CHARACTERISTICS

The characteristics listed below are the standard ones. If requested, others may be available.

•MECHANICAL PROTECTION

The standard degree of mechanical protection for motors, series BF4, is IP 54 and for motors, series BF5 and BF6, is IP 55 according to IEC 34-5 (1991).

•VOLTAGE AND FREQUENCY

MOTORS WITH FRAME SIZE UP TO 160

These motors are wound to work at either 50 Hz or 60 Hz, in the following voltage ranges:

Δ 220-240/250-280 V 50/60 Hz Y 380-415/440-480 V 50/60 Hz	For outputs up to 3 kW/3.6 kW
Δ 380-415/440-480 V 50/60 Hz	For the remaining outputs

For any voltage value in these ranges, a variation of -5% to +6% is allowed according to the majority of the standards. The electrical characteristics detailed in this catalog apply to the standard voltages/frequencies shown above. Strictly speaking, these values will vary slightly with actual voltage and frequency, but the variations will generally remain within the tolerances given in IEC 34-1 (1983).

MOTORS WITH FRAME SIZES 180 AND ABOVE

These motors are wound for operation only at one of the above-mentioned voltages and frequencies.

•INSULATION

All the models referred to in this catalog are class F insulated.

•TEMPERATURE RISE

Although the maximum temperature rise allowed for class F insulation will be 105 K, in general, the temperature rise of BF motors is below 80 K measured by resistance variation according to IEC 34-1 (1983).

•NOISE LEVEL

BF series TEFC motors meet IEC 34-9 (1990) concerning noise limits.

•DYNAMIC BALANCING

BF series TEFC motors are dynamically balanced with a half key according to IEC 34-14 (1982).

5.4 CONSTRUCTION

•CASING

In sizes up to 160 the stator frame, the IM 1001 drive-end endshield, the non-drive and endshield, and the terminal box are high-pressure die-cast in aluminum alloy. However, the endshields have integral cast iron liners forming the bearing housings. Flange endshields are in cast iron. In sizes 180 up to 225, the stator frame and the terminal box are low pressure die-cast also in aluminum alloy, the endshields being in cast iron. In sizes 250 and above, all of these parts are in cast iron.

•SQUIRREL CAGE

The squirrel cages are in die-cast aluminum, the casting being by high-pressure or by centrifugation. However, the cages of the motors BF6 400, or 1000 and 750 rpm, are formed by copper bars brazed to copper end-rings using medium frequency technology.

•TERMINAL BOX

On motors up to size 225 the terminal box is an integral part of the frame. Motors, sizes 250 and above, have a conventional terminal box that can rotate 180°. As standard in this range the terminal box entries are on the right side of the motor viewed from shaft end. By rotating the terminal box, these entries can be transferred to the left side. Below are the standard terminal arrangements and terminal box entries.

Motor Types	Quantities and Sizes	
	Terminals	Terminal Box Entries
BF5 71 up to BF5 90	6 x M4	2 x ø 22.5 (1)
BF5 100 and BF5 112	6 x M4	4 x ø 28.5 (2)
BF5 132	6 x M6	4 x ø 28.5 (2)
BF5 160	6 x M6	4 x ø 37 (2)
BF5 180	6 x M8	4 x ø 37 (2)
BF5 200 and BF5 225	6 x M8	4 x ø 47 (2)
BF4 250 and BF4 280	6 x M10	2 x Pg 42 (3)
BF4 315	6 x M10	2 x Pg 48 (3)
BF6 315 up to BF6 400	6 x M12	2 x Pg 48 (3)

(1) One entry on each side
(2) Two entries on each side
(3) Two entries on the right side that can be transferred to the left side

•EARTH CONNECTION

All motors are equipped with an earth screw or an earth bar inside the terminal box. Earth bars are used on size 250 and above. All motors size 112 and above have a second earth screw or earth bar on one foot or on the flange as the case may be.

•BEARINGS AND LUBRICATION

The motors of series BF5 are equipped on both sides with deep groove ball bearings greased for life and pre-loaded by an axial spring washer. The motors of series BF4 are equipped with a roller bearing on one side and a deep groove ball bearing on the other side. Grease nipples and grease valves are provided on both sides. The motors of series BF6 are equipped on both sides with deep groove ball bearings and pre-loaded by an axial spring washer. Grease nipples and grease valves are provided on both sides.

The standard drive end bearing will be replaced by a roller one when belt transmission is used or by an angular contact bearing when the mounting form is vertical. The bearing types for the motors referred to in this catalog are as follows:

Motor Type	Speed (rpm)	Bearing Reference	
		Drive End	Non-Drive End
BF5 71	All	6202 2Z C3	6202 2Z C3
BF5 80	All	6204 2Z C3	6202 2Z C3
BF5 90	All	6205 2Z C3	6204 2Z C3
BF5 100	All	6206 2Z C3	6205 2Z C3
BF5 112	All	6206 2Z C3	6205 2Z C3
BF5 132	All	6208 2Z C3	6208 2Z C3
BF5 160	All	6209 2Z C3	6209 2Z C3
BF5 180	All	6210 2Z C3	6210 2Z C3
BF5 200	All	6212 2Z C3	6212 2Z C3
BF5 225	All	6213 2Z C3	6212 2Z C3
BF4 250	All	NU 314	6314 C3
BF4 280	3000	6314 C3	NU 314
BF4 280	Other	NU 316	6314 C3
BF4 315	3000	6314 C3	NU 316
BF4 315	Other	NU 317	6314 C3
BF6 315	3000	6219 C3	6219 C3
BF6 315	Other	6220 C3	6219 C3
BF6 355	3000	6219 C3	6219 C3
BF6 355	Other	6222 C3	6219 C3
BF6 400	3000	6219 C3	6219 C3
BF6 400	Other	6224 C3	6219 C3

In IP55 motors the following V-Ring joints are used:

Motor Type	Speed (rpm)	V-Ring Reference	
		Drive End	Non-Drive End
BF5 71	All	V-14 A	V-14 A
BF5 80	All	V-18 A	V-14 A
BF5 90	All	V-25 A	V-18 A
BF5 100	All	V-30 A	V-25 A
BF5 112	All	V-30 A	V-25 A
BF5 132	All	V-40 A	V-40 A
BF5 160	All	V-45 A	V-45 A
BF5 180	All	V-50 A	V-50 A
BF5 200	All	V-60 A	V-60 A
BF5 225	All	V-65 A	V-60 A
BF6 315	3000	V-95 A	V-95 A
BF6 315	Other	V-100 A	V-95 A
BF6 355	3000	V-95 A	V-95 A
BF6 355	Other	V-110 A	V-95 A
BF6 400	3000	V-95 A	V-95 A
BF6 400	Other	V-120 A	V-95 A

•FAN AND FAN COVER

Up to shaft height 160, the motors are equipped with a polypropylene fan, radially protected by a cover in aluminum alloy that is an integral part of the endshield, and axially protected by a polypropylene grid.

Motors of shaft height 180 and above are equipped with fans that can be made from polypropylene, aluminum alloy or welded construction. The fan covers are in stamped steel or welded constructed.

•DIRECTION OF ROTATION

The motors up to a shaft height of 355 are equipped with a bi-directional fan so that they can turn in both directions. Motors of shaft height 400 are equipped with directional fans. The required direction of rotation of these motors must be specified in the order.

•DRAIN HOLES

The motors up to shaft height 160 are not provided with drain holes. All the remaining motors have drain holes whose location depends on the mounting form of the motor.

•NORMAL MOUNTINGS

The normal mounting positions are the following, identified in IEC 34-7 code II:

IM 1001

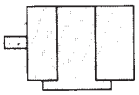

Motor with feet down. One shaft end.

IM 3001

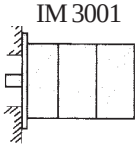

Motor without feet. One shaft end. Drive end flange mounting with free fixing holes. Horizontally mounted (available up to type BF4 315).

IM 3601

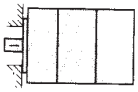

Motor without feet. One shaft end. Drive end flange mounting with threaded fixing holes. Horizontally mounted (available up to type 112).

IM 2001

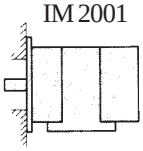

Motor with feet down. One shaft end. Drive end flange mounting with free fixing holes. Horizontally mounted.

IM 2101

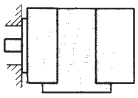

Motor with feet down. One shaft end. Drive end flange mounting with threaded fixing holes. Horizontally mounted.

IM 3011

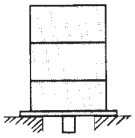

As IM 3001, but vertically mounted with shaft end down.

IM 3611

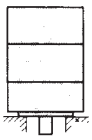

As IM 3601, but vertically mounted with shaft end down.

IM 1011

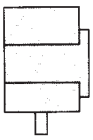

Motor with feet. Vertically mounted with shaft end down.

5.5 TECHNICAL DATA

• NOMENCLATURE KEY

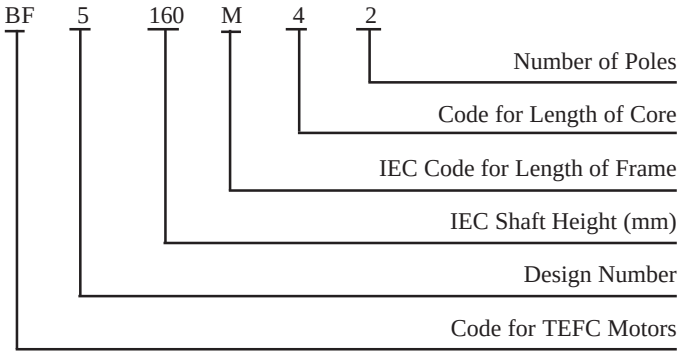

•OUTPUT DERATING CONDITIONS

The outputs presented in the tables concern normal working conditions according to IEC 34-1 (1983). Environmental and electrical site conditions (altitude, atmosphere temperature, form and symmetry of voltage, and voltage variation during the operation) must be maintained within certain limits in order to get the nominal output from the motor. If these limits are not respected, then a reduction of output will occur as stated below:

Voltage

These motors can supply this nominal output only if the voltage variation is less than 5%. If a greater deviation occurs, then the output must be reduced to avoid dangerous overheating. The figures below should be observed:

Voltage Deviation	Output Reduction
± 5%	0%
± 7.5%	5%
± 10%	10%

Ambient Temperature

These motors can supply their nominal output if the atmosphere temperature is no more than 40°C. If a higher atmosphere temperature is expected, then the output must be reduced to avoid dangerous overheating. The figures below should be observed:

Ambient Temperature	Output Reduction
40°C	0%
45°C	5%
50°C	10%
55°C	15%
60°C	20%

Altitude

These motors were designed to operate at an altitude not exceeding 1000 m above sea level. If site conditions exceed this altitude, the following output reduction must be made:

Altitude Above Sea Level (m)	Output Reduction for Atmosphere Temperature of	
	40°C	25°C
1000	0%	0%
2000	6%	0%
3000	12%	0%
4000	18%	6%

Ametric® Motor Part Number Breakdown

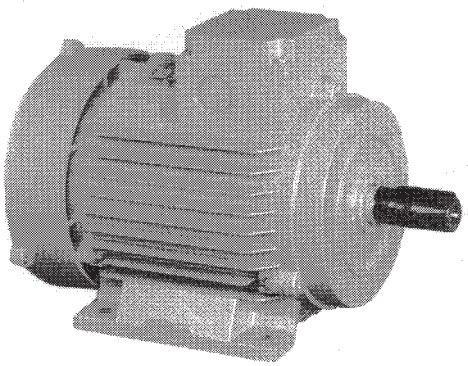

Ametric® Motors are generally:

1. AC
2. Three Phase
3. IEC Standard
4. Class F
5. Totally Enclosed Fan Cooled
6. 50Hz/60Hz
7. NOT Premium Effeciency Rated

B14 = Small Flange
G = B5 = Large Flange
P = Foot Mount

Not Used | Number of Poles | Type of Mount

B F 5 7 1 M 4 4 G . 3 7

Three Phase AC Motor | Frame Size | Length Thru Core | KW Rating @ 50Hz

BFF5 = Brake Motor

Small, Medium and Large

50Hz = “European”
60Hz = “American”

2 Pole = 3600rpm@60Hz with nominal load (3000rpm@50Hz)
4 Pole = 1800rpm@60Hz with nominal load (1500rpm@50Hz)
6 Pole = 1200rpm@60Hz with nominal load (1000rpm@50Hz)
8 Pole = 900rpm@60Hz with nominal load (750 rpm@50Hz)

7200 / # of Poles = RPM

Please see the catalog for further details!

STANDARD MOTOR METRIC IEC STANDARD

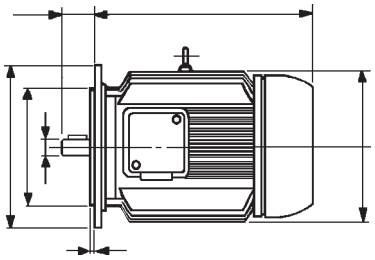

60Hz* 3600RPM 2 Pole 250-280 or 440-480V

Part Number	Type Mount	kW	HP	Weight kg
BF7 56M22 P 0.09	foot	0.09	0.12	–
BF7 56M42 P 0.13	foot	0.13	0.17	–
BF7 63M22 P 0.18	foot	0.18	0.25	3.9
BF7 63M42 P 0.25	foot	0.25	0.34	4.3
BF5 71M42 P 0.25	foot	0.25	0.34	5.8
BF5 71M42 P 0.37	foot	0.37	0.50	5.8
BF5 71M42 P 0.55	foot	0.55	0.74	5.8
BF5 80M42 P 0.75	foot	0.75	1.01	9.0
BF5 80M42 P 1.1	foot	1.1	1.47	9.0
BF5 90S22 P 1.5	foot	1.5	2.01	12
BF5 90L42 P 2.2	foot	2.2	2.95	14
BF5 100L42 P 3	foot	3	4.02	20
BF5 112M22 P 4	foot	4	5.36	24
BF5 132S42 P 5.5	foot	5.5	7.37	39
BF5 132S62 P 7.5	foot	7.5	10.05	45
BF5 132S62FS P 9	foot	9	12.06	54
BF5 160M22 P 11	foot	11	14.75	65
BF5 160M42 P 15	foot	15	20.11	70
BF5 160L62 P 18.5	foot	18.5	24.80	83
BF5 180M42 P 22	foot	22	29.49	120
BF5 200L62 P 30	foot	30	40.21	149
BF5 200L82 P 37	foot	37	49.60	185
BF5 225M42 P 45	foot	45	60.32	195
BF4 250M42 P 55	foot	55	73.73	445
BF4 280SA42 P 75	foot	75	100.54	455
BF4 280MA62 P 90	foot	90	120.64	500
BF4 315SA42 P 110	foot	110	147.45	735
BF4 315MA62 P 132	foot	132	176.94	805
BF6 315L22 P 160	foot	160	214.48	1,015
BF6 315L42 P 200	foot	200	268.10	1,160
BF6 355M02 P 250	foot	250	335.12	1,325
BF6 355M22 P 280	foot	280	375.34	1,450
BF6 355M42 P 315	foot	315	422.25	1,650
BF6 355L62 P 355	foot	355	475.87	1,820
BF6 400L02 P 400	foot	400	536.19	2,300
BF6 400L22 P 450	foot	450	603.22	2,500
BF6 400L42 P 500	foot	500	670.24	2,700

50Hz* 3000RPM 2 Pole 220-240V or 380-415V

Part Number	Type Mount	kW	HP	Weight kg
BF7 56M22 G 0.09	flange	0.09	0.12	–
BF7 56M42 G 0.09	flange	0.13	0.17	–
BF7 63M22 P 0.18	flange	0.18	0.25	3.9
BF7 63M42 P 0.25	flange	0.25	0.34	4.3
BF5 71M42 G 0.25	flange	0.25	0.34	5.8
BF5 71M42 G 0.37	flange	0.37	0.50	5.8
BF5 71M42 G 0.55	flange	0.55	0.74	5.8
BF5 80M42 G 0.75	flange	0.75	1.01	9.0
BF5 80M42 G 1.1	flange	1.1	1.47	9.0
BF5 90S22 G 1.5	flange	1.5	2.01	12
BF5 90L42 G 2.2	flange	2.2	2.95	14
BF5 100L42 G 3	flange	3	4.02	20
BF5 112M22 G 4	flange	4	5.36	24
BF5 132S42 G 5.5	flange	5.5	7.37	39
BF5 132S62 G 7.5	flange	7.5	10.05	45
BF5 132S62FS G 9	flange	9	12.06	54
BF5 160M22 G 11	flange	11	14.75	65
BF5 160M42 G 15	flange	15	20.11	70
BF5 160L62 G 18.5	flange	18.5	24.80	83
BF5 180M42 G 22	flange	22	29.49	120
BF5 200L62 G 30	flange	30	40.21	149
BF5 200L82 G 37	flange	37	49.60	185
BF5 225M42 G 45	flange	45	60.32	195
BF4 250M42 G 55	flange	55	73.73	445
BF4 280SA42 G 75	flange	75	100.54	455
BF4 280MA62 G 90	flange	90	120.64	500
BF4 315SA42 G 110	flange	110	147.45	735
BF4 315MA62 G 132	flange	132	176.94	805
BF6 315L22 G 160	flange	160	214.48	1,015
BF6 315L42 G 200	flange	200	268.10	1,160
BF6 355M02 G 250	flange	250	335.12	1,325
BF6 355M22 G 280	flange	280	375.34	1,450
BF6 355M42 G 315	flange	315	422.25	1,650
BF6 355L62 G 355	flange	355	475.87	1,820
BF6 400L02 G 400	flange	400	536.19	2,300
BF6 400L22 G 450	flange	450	603.22	2,500
BF6 400L42 G 500	flange	500	670.24	2,700

* All Ametric® Motors are designed to operate domestically at 60Hz and for export at 50Hz (with a corresponding change in voltage and RPMs) and are available with either foot or flange mountings. For outputs lower than 3 kw △ terminals = 220-240V/250-280V 50/60Hz & Y terminals = 380-415V/440-480V 50/60Hz. For outputs greater than 3 kw only △ terminals available at 380-415V/440-480V 50/60Hz . (voltage variation -5% +6%)

STANDARD MOTOR METRIC IEC STANDARD

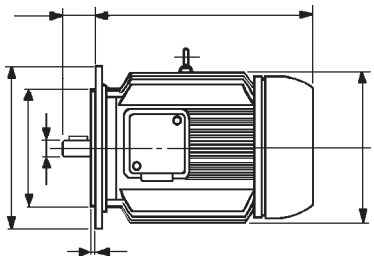

60Hz* 1800RPM 4 Pole 250-280 or 440-480V

Part Number	Type Mount	kW	HP	Weight kg
BF7 56M44 P 0.09	foot	0.09	0.12	–
BF7 63M24 P 0.12	foot	0.12	0.16	3.9
BF7 63M44 P 0.18	foot	0.18	0.25	4.3
BF5 71M44 P 0.18	foot	0.18	0.24	5.8
BF5 71M44 P 0.25	foot	0.25	0.34	5.8
BF5 71M44 P 0.37	foot	0.37	0.50	5.8
BF5 80M44 P 0.55	foot	0.55	0.74	8.5
BF5 80M44 P 0.75	foot	0.75	1.01	8.5
BF5 90S24 P 1.1	foot	1.1	1.47	11.5
BF5 90L44 P 1.5	foot	1.5	2.01	13.5
BF5 100L24 P 2.2	foot	2.2	2.95	18
BF5 100L44 P 3	foot	3	4.02	21
BF5 112M44 P 4	foot	4	5.36	25
BF5 132S44 P 5.5	foot	5.5	7.37	38
BF5 132M84 P 7.5	foot	7.5	10.05	45
BF5 132M84FS P 9	foot	9	12.06	54
BF5 160M44 P 11	foot	11	14.75	69
BF5 160L64 P 15	foot	15	20.11	81
BF5 180M44 P 18.5	foot	18.5	24.80	113
BF5 180L64 P 22	foot	22	29.49	125
BF5 200L64 P 30	foot	30	40.21	160
BF5 225S24 P 37	foot	37	49.60	183
BF5 225M44 P 45	foot	45	60.32	195
BF4 250M44 P 55	foot	55	73.73	390
BF4 280SA44 P 75	foot	75	100.54	470
BF4 280MA84 P 90	foot	90	120.64	550
BF4 315SA44 P 110	foot	110	147.45	750
BF4 315MA64 P 132	foot	132	176.94	820
BF6 315L24 P 160	foot	160	214.48	1,150
BF6 315L44 P 200	foot	200	268.10	1,275
BF6 355M04 P 250	foot	250	335.12	1,410
BF6 355M24 P 280	foot	280	375.34	1,520
BF6 355M44 P 315	foot	315	422.25	1,630
BF6 355L64 P 355	foot	355	475.87	1,800
BF6 400L24 P 400	foot	400	536.19	2,400
BF6 400L44 P 450	foot	450	603.22	2,650
BF6 400L64 P 500	foot	500	670.24	2,880

50Hz* 1500RPM 4 Pole 220-240V or 380-415V

Part Number	Type Mount	kW	HP	Weight kg
BF7 56M44 G 0.09	flange	0.09	0.12	–
BF7 63M24 P 0.12	flange	0.12	0.16	3.9
BF7 63M44 P 0.18	flange	0.18	0.25	4.3
BF5 71M44 G 0.18	flange	0.18	0.24	5.8
BF5 71M44 G 0.25	flange	0.25	0.34	5.8
BF5 71M44 G 0.37	flange	0.37	0.50	5.8
BF5 80M44 G 0.55	flange	0.55	0.74	8.5
BF5 80M44 G 0.75	flange	0.75	1.01	8.5
BF5 90S24 G 1.1	flange	1.1	1.47	11.5
BF5 90L44 G 1.5	flange	1.5	2.01	13.5
BF5 100L24 G 2.2	flange	2.2	2.95	18
BF5 100L44 G 3	flange	3	4.02	21
BF5 112M44 G 4	flange	4	5.36	25
BF5 132S44 G 5.5	flange	5.5	7.37	38
BF5 132M84 G 7.5	flange	7.5	10.05	45
BF5 132M84FS G 9	flange	9	12.06	54
BF5 160M44 G 11	flange	11	14.75	69
BF5 160L64 G 15	flange	15	20.11	81
BF5 180M44 G 18.5	flange	18.5	24.80	113
BF5 180L64 G 22	flange	22	29.49	125
BF5 200L64 G 30	flange	30	40.21	160
BF5 225S24 G 37	flange	37	49.60	183
BF5 225M44 G 45	flange	45	60.32	195
BF4 250M44 G 55	flange	55	73.73	390
BF4 280SA44 G 75	flange	75	100.54	470
BF4 280MA84 G 90	flange	90	120.64	550
BF4 315SA44 G 110	flange	110	147.45	750
BF4 315MA64 G 132	flange	132	176.94	820
BF6 315L24 G 160	flange	160	214.48	1,150
BF6 315L44 G 200	flange	200	268.10	1,275
BF6 355M04 G 250	flange	250	335.12	1,410
BF6 355M24 G 280	flange	280	375.34	1,520
BF6 355M44 G 315	flange	315	422.25	1,630
BF6 355L64 G 355	flange	355	475.87	1,800
BF6 400L24 G 400	flange	400	536.19	2,400
BF6 400L44 G 450	flange	450	603.22	2,650
BF6 400L64 G 500	flange	500	670.24	2,880

* All Ametric® Motors are designed to operate domestically at 60Hz and for export at 50Hz (with a corresponding change in voltage and RPMs) and are available with either foot or flange mountings. For outputs lower than 3 kw △ terminals = 220-240V/250-280V 50/60Hz & Y terminals = 380-415V/440-480V 50/60Hz. For outputs greater than 3 kw only △ terminals available at 380-415V/440-480V 50/60Hz . (voltage variation -5% +6%)

STANDARD MOTOR METRIC IEC STANDARD

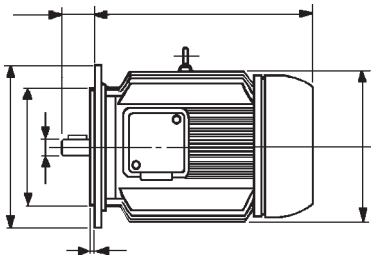

60Hz* 1200RPM 6 Pole 250-280 or 440-480V

Part Number	Type Mount	kW	HP	Weight kg
BF7 56M46 P 0.06	foot	0.06	0.08	–
BF5 71M46 P 0.12	foot	0.12	0.16	5.8
BF5 71M46 P 0.185	foot	0.185	0.25	5.8
BF5 71M46 P 0.25	foot	0.25	0.34	5.8
BF5 80M46 P 0.37	foot	0.37	0.50	8.5
BF5 80M66 P 0.55	foot	0.55	0.74	9.0
BF5 90S26 P 0.75	foot	0.75	1.01	11.5
BF5 90L66 P 1.1	foot	1.1	1.47	15
BF5 100L46 P 1.5	foot	1.5	2.01	21
BF5 112M46 P 2.2	foot	2.2	2.95	25
BF5 132S86 P 3	foot	3	4.02	44
BF5 132M86 P 4	foot	4	5.36	44
BF5 132M86 P 5.5	foot	5.5	7.37	49
BF5 160M66 P 7.5	foot	7.5	10.05	75
BF5 160L66 P 11	foot	11	14.75	77
BF5 180L46 P 15	foot	15	20.11	123
BF5 200L26 P 18.5	foot	18.5	24.80	125
BF5 200L46 P 22	foot	22	29.49	140
BF5 225M46 P 30	foot	30	40.21	180
BF4 250M26 P 37	foot	37	49.60	370
BF4 280SA26 P 45	foot	45	60.32	450
BF4 280MA46 P 55	foot	55	73.73	490
BF4 315SA46 P 75	foot	75	100.54	680
BF4 315MA66 P 90	foot	90	120.64	770
BF6 315L26 P 110	foot	110	147.45	1,050
BF6 315L46 P 132	foot	132	176.94	1,100
BF6 315L66 P 160	foot	160	214.48	1,200
BF6 355M06 P 200	foot	200	268.10	1,525
BF6 355M26 P 250	foot	250	335.12	1,750
BF6 355L46 P 280	foot	280	375.34	1,940
BF6 400L26 P 315	foot	315	422.25	2,020
BF6 400L46 P 355	foot	355	475.87	2,230
BF6 400L66 P 400	foot	400	536.19	2,500

50Hz* 1000RPM 6 Pole 220-240V or 380-415V

Part Number	Type Mount	kW	HP	Weight kg
BF5 71M46 G 0.12	flange	0.12	0.16	5.8
BF5 71M46 G 0.185	flange	0.185	0.25	5.8
BF5 71M46 G 0.25	flange	0.25	0.34	5.8
BF5 80M46 G 0.37	flange	0.37	0.50	8.5
BF5 80M66 G 0.55	flange	0.55	0.74	9.0
BF5 90S26 G 0.75	flange	0.75	1.01	11.5
BF5 90L66 G 1.1	flange	1.1	1.47	15
BF5 100L46 G 1.5	flange	1.5	2.01	21
BF5 112M46 G 2.2	flange	2.2	2.95	25
BF5 132S86 G 3	flange	3	4.02	44
BF5 132M86 G 4	flange	4	5.36	44
BF5 132M86 G 5.5	flange	5.5	7.37	49
BF5 160M66 G 7.5	flange	7.5	10.05	75
BF5 160L66 G 11	flange	11	14.75	77
BF5 180L46 G 15	flange	15	20.11	123
BF5 200L26 G 18.5	flange	18.5	24.80	125
BF5 200L46 G 22	flange	22	29.49	140
BF5 225M46 G 30	flange	30	40.21	180
BF4 250M26 G 37	flange	37	49.60	370
BF4 280SA26 G 45	flange	45	60.32	450
BF4 280MA46 G 55	flange	55	73.73	490
BF4 315SA46 G 75	flange	75	100.54	680
BF4 315MA66 G 90	flange	90	120.64	770
BF6 315L26 G 110	flange	110	147.45	1,050
BF6 315L46 G 132	flange	132	176.94	1,100
BF6 315L66 G 160	flange	160	214.48	1,200
BF6 355M06 G 200	flange	200	268.10	1,525
BF6 355M26 G 250	flange	250	335.12	1,750
BF6 355L46 G 280	flange	280	375.34	1,940
BF6 400L26 G 315	flange	315	422.25	2,020
BF6 400L46 G 355	flange	355	475.87	2,230
BF6 400L66 G 400	flange	400	536.19	2,500

* All Ametric® Motors are designed to operate domestically at 60Hz and for export at 50Hz (with a corresponding change in voltage and RPMs) and are available with either foot or flange mountings. For outputs lower than 3 kw △ terminals = 220-240V/250-280V 50/60Hz & Y terminals = 380-415V/440-480V 50/60Hz. For outputs greater than 3 kw only △ terminals available at 380-415V/440-480V 50/60Hz . (voltage variation -5% +6%)

STANDARD MOTOR METRIC IEC STANDARD

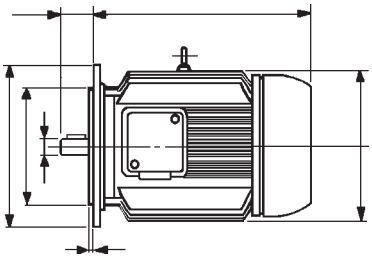

60Hz* 900RPM 8 Pole 250-280 or 440-480V

Part Number	Type Mount	kW	HP	Weight kg
BF5 71M48 P 0.09	foot	0.09	0.12	5.8
BF5 71M48 P 0.12	foot	0.12	0.16	5.8
BF5 80M48 P 0.185	foot	0.185	0.25	8.5
BF5 80M68 P 0.25	foot	0.25	0.34	9.0
BF5 90S28 P 0.37	foot	0.37	0.50	11.5
BF5 90L68 P 0.55	foot	0.55	0.74	15
BF5 100L48 P 0.75	foot	0.75	1.01	21
BF5 100L48 P 1.1	foot	1.1	1.47	21
BF5 112M48 P 1.5	foot	1.5	2.01	25
BF5 132S88 P 2.2	foot	2.2	2.95	44
BF5 132M88 P 3	foot	3	4.02	44
BF5 160M68 P 4	foot	4	5.36	80
BF5 160M68 P 5.5	foot	5.5	7.37	80
BF5 160L68 P 7.5	foot	7.5	10.05	81
BF5 180L48 P 11	foot	11	14.75	115
BF5 200L48 P 15	foot	15	20.11	140
BF5 225S28 P 18.5	foot	18.5	24.80	170
BF5 225M48 P 22	foot	22	29.49	180
BF4 250M48 P 30	foot	30	40.21	395
BF4 280SA48 P 37	foot	37	49.60	500
BF4 280MA68 P 45	foot	45	60.32	555
BF4 315SA48 P 55	foot	55	73.73	700
BF4 315MA68 P 75	foot	75	100.54	790
BF6 315L28 P 90	foot	90	120.64	960
BF6 315L48 P 110	foot	110	147.45	1,075
BF6 315L68 P 132	foot	132	176.94	1,225
BF6 355M08 P 160	foot	160	214.48	1,360
BF6 355M28 P 200	foot	200	268.10	1,600
BF6 355L48 P 250	foot	250	335.12	1,950
BF6 400L68 P 280	foot	280	375.34	2,450
BF6 400L88 P 315	foot	315	422.25	2,650

50Hz* 750RPM 8 Pole 220-240V or 380-415V

Part Number	Type Mount	kW	HP	Weight kg
BF5 71M48 G 0.09	flange	0.09	0.12	5.8
BF5 71M48 G 0.12	flange	0.12	0.16	5.8
BF5 80M48 G 0.185	flange	0.185	0.25	8.5
BF5 80M68 G 0.25	flange	0.25	0.34	9.0
BF5 90S28 G 0.37	flange	0.37	0.50	11.5
BF5 90L68 G 0.55	flange	0.55	0.74	15
BF5 100L48 G 0.75	flange	0.75	1.01	21
BF5 100L48 G 1.1	flange	1.1	1.47	21
BF5 112M48 G 1.5	flange	1.5	2.01	25
BF5 132S88 G 2.2	flange	2.2	2.95	44
BF5 132M88 G 3	flange	3	4.02	44
BF5 160M68 G 4	flange	4	5.36	80
BF5 160M68 G 5.5	flange	5.5	7.37	80
BF5 160L68 G 7.5	flange	7.5	10.05	81
BF5 180L48 G 11	flange	11	14.75	115
BF5 200L48 G 15	flange	15	20.11	140
BF5 225S28 G 18.5	flange	18.5	24.80	170
BF5 225M48 G 22	flange	22	29.49	180
BF4 250M48 G 30	flange	30	40.21	395
BF4 280SA48 G 37	flange	37	49.60	500
BF4 280MA68 G 45	flange	45	60.32	555
BF4 315SA48 G 55	flange	55	73.73	700
BF4 315MA68 G 75	flange	75	100.54	790
BF6 315L28 G 90	flange	90	120.64	960
BF6 315L48 G 110	flange	110	147.45	1,075
BF6 315L68 G 132	flange	132	176.94	1,225
BF6 355M08 G 160	flange	160	214.48	1,360
BF6 355M28 G 200	flange	200	268.10	1,600
BF6 355L48 G 250	flange	250	335.12	1,950
BF6 400L68 G 280	flange	280	375.34	2,450
BF6 400L88 G 315	flange	315	422.25	2,650

* All Ametric® Motors are designed to operate domestically at 60Hz and for export at 50Hz (with a corresponding change in voltage and RPMs) and are available with either foot or flange mountings. For outputs lower than 3 kw △ terminals = 220-240V/250-280V 50/60Hz & Y terminals = 380-415V/440-480V 50/60Hz. For outputs greater than 3 kw only △ terminals available at 380-415V/440-480V 50/60Hz . (voltage variation -5% +6%)

DIMENSIONS (MM)

BF7 63 UP TO 160 MOTORS

B3

FOOT MOUNTED MOTORS

IM FORM 1001; 1002; 1051; 1052; 1061; 1062; 1071; 1072; 1011; 1012; 1031; 1032

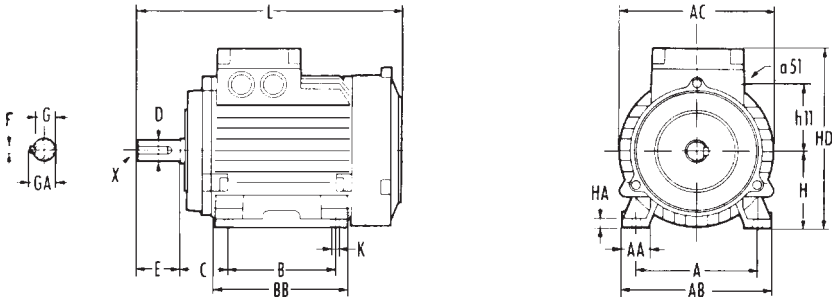

MOTOR TYPE	A	AA	AB	AC	B	BB	C	H	HA	HD	h11	K	L	a51 Hole ø	a51 Cable Gland	SHAFT EXTENSIONS D	E	F	G	GA	X
BF7 63M	100	—	—	122	80	—	40	63	8	164.5	52	11	203	—	—	11	23	4	9	12.5	M5 x 10
BF7 71M	112	25	132	140	90	110	45	71	8	177	63	7	227	1 x 22.5	Pg 16	14	30	5	11	16	M5 x 10
BF5 80M	125	27.5	150	157	100	120	50	80	9.5	192.5	68.5	10	265	1 x 22.5	Pg 16	19	40	6	15.5	21.5	M6 x 16
BF5 90S	140	30	171	180	100	127	56	90	10	210	78.5	10	283	1 x 22.5	Pg 16	24	50	8	20	27	M8 x 19
BF5 90L	140	30	171	180	125	152	56	90	10	210	78.5	10	308	1 x 22.5	Pg 16	24	50	8	20	27	M8 x 19
BF5 100L	160	35	195	200	140	175	63	100	12	235.5	90.5	12	350	1 x 28.5	Pg 21	28	60	8	24	31	M10 x 22
BF5 112M	190	40	220	211	140	175	70	112	12	257.5	88	12	382.5	2 x 28.5	Pg 21	28	60	8	24	31	M10 x 22
BF5 132S	216	52	260	257	140	218	89	132	16	295	103	12	478	2 x 28.5	Pg 21	38	80	10	33	41	M12 x 28
BF5 132M	216	52	260	257	178	218	89	132	16	295	103	12	478	2 x 28.5	Pg 21	38	80	10	33	41	M12 x 28
BF5 160M	254	60	300	292	210	300	106	160	18	356	120	14.5	606	2 x 37	Pg 29	42	110	12	37	45	M16 x 36
BF5 160L	254	60	300	292	251	300	108	160	18	356	120	14.5	606	2 x 37	Pg 29	42	110	12	37	45	M16 x 36

BF7 63 UP TO 160 MOTORS

B5

FLANGE MOUNTED MOTORS

FREE-GOING FIXING HOLES
IM FORM 3001; 3002; 3011; 3012; 3031; 3032

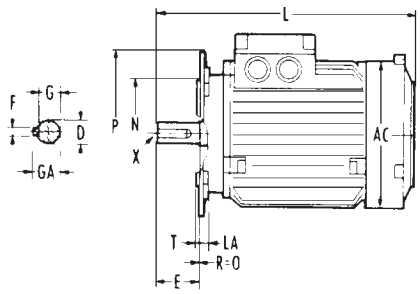

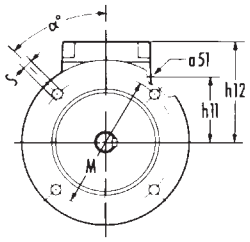

B14

THREADED FIXING HOLES
IM FORM 3601; 3602; 3611; 3612; 3631; 3632

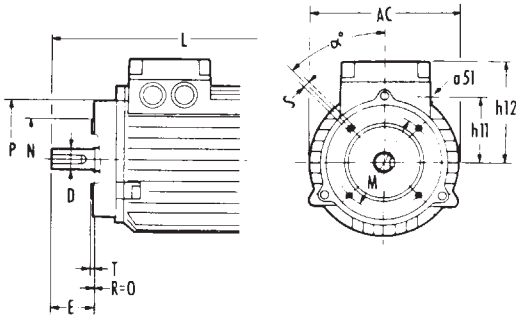

MOTOR TYPE	IM Form	IEC	M	N	P	LA	T	α	S	AC	h11	h12	L	a51 Hole ø	a51 Cable Gland	D	E	F	G	GA	X
	FLANGE DIMENSIONS									MAIN DIMENSIONS						SHAFT EXTENSIONS					
BF7 63M	30 - -	F115	115	95	140	8	2.5	90°	9.5	122	52	92	203	—	—	11	23	4	9	12.5	M5 x 10
	36 - -	F75	75	60	90	—	—	90°	M5	122	52	92	203	—	—	11	23	4	9	12.5	M5 x 10
BF7 71M	30 - -	F130	130	110	160	8	3.5	45°	10	140	63	106	227	22.5	Pg 16	14	30	5	11	16	M5 x 10
	36 - -	F 85	85	70	105	—	2.5	45°	M6	140	63	106	227	22.5	Pg 16	14	30	5	11	16	M5 x 10
BF5 80M	30 - -	F165	165	130	200	8	3.5	45°	12	157	68.5	112.5	265	22.5	Pg 16	19	40	6	15.5	21.5	M6 x 16
	36 - -	F100	100	80	120	—	3	45°	M6	157	68.5	112.5	265	22.5	Pg 16	19	40	6	15.5	21.5	M6 x 16
BF5 90S	30 - -	F165	165	130	200	10	3.5	45°	12	180	78.5	120	283	22.5	Pg 16	24	50	8	20	27	M8 x 19
	36 - -	F115	115	95	140	—	3	45°	M8	180	78.5	120	283	22.5	Pg 16	24	50	8	20	27	M8 x 19
BF5 90L	30 - -	F165	165	130	200	10	3.5	45°	12	180	78.5	120	308	22.5	Pg 16	24	50	8	20	27	M8 x 19
	36 - -	F115	115	95	140	—	3	45°	M8	180	78.5	120	308	22.5	Pg 16	24	50	8	20	27	M8 x 19
BF5 100L	30 - -	F215	215	180	250	12	4	45°	14.5	200	90.5	135.5	350	28.5	Pg 21	28	60	8	24	31	M10 x 22
	36 - -	F130	130	110	160	—	3.5	45°	M8	200	90.5	135.5	350	28.5	Pg 21	28	60	8	24	31	M10 x 22
BF5 112M	30 - -	F215	215	180	250	12	4	45°	14.5	211	88	145.5	382.5	28.5	Pg 21	28	60	8	24	31	M10 x 22
	36 - -	F130	130	110	160	—	3.5	45°	M8	211	88	145.5	382.5	28.5	Pg 21	28	60	8	24	31	M10 x 22
BF5 132S - M	30 - -	F265	265	230	300	12	4	45°	14.5	257	103	163	478	28.5	Pg 21	38	80	10	33	41	M12 x 28
	36 - -	F165	165	130	195	—	3.5	45°	M10	257	103	163	478	28.5	Pg 21	38	80	10	33	41	M12 x 28
BF5 160M - L	30 - -	F300	300	250	350	13	5	45°	18.5	292	120	196	606	37	Pg 29	42	110	12	37	45	M16 x 36

* ISO tolerances: 14 i 6 $\left(^{+0{,}008}_{-0.003}\right)$; 19, 24, 28 j 6 $\left(^{+0.009}_{-0.004}\right)$; 38, 42 k 6 $\left(^{+0.018}_{+0.002}\right)$

TOTALLY ENCLOSED FAN-COOLED THREE-PHASE MOTORS

FOOT MOUNTED MOTORS

IM 1001; 1002; 1051; 1052; 1061; 1062; 1071; 1072; 1011; 1012; 1031; 1032

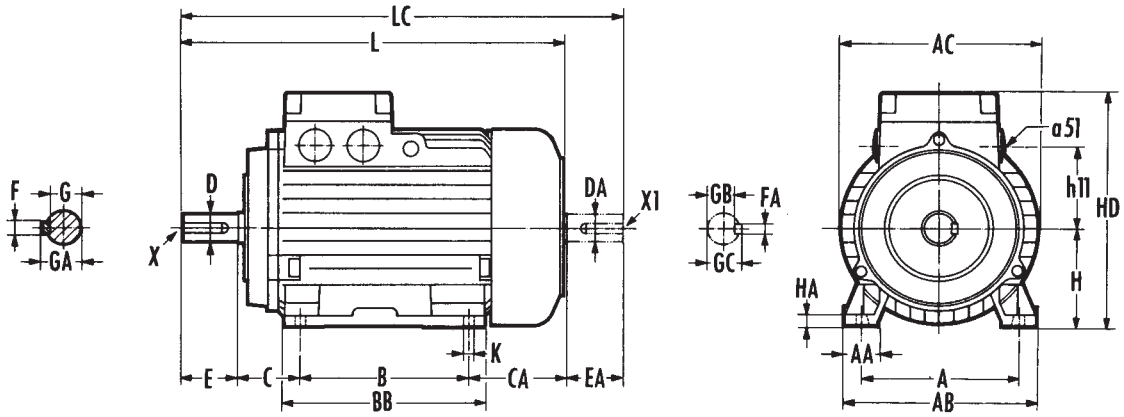

MOTOR TYPE	DIMENSIONS (mm)																	SHAFT EXTENSIONS											
	A	AA	AB	AC	B	BB	C	CA	H	HA	HD	h11	K	L	LC	a51 hole ϕ	a51 cable gland	D*	DA*	E	EA	F	FA	G	GA	GB	GC	X	X1
BF5 180M(1)	279	72	354	342	241	331	121	211	180	22	401	147,5	15	678	763	37	TA 29	48	38	110	80	14	10	42,5	51,5	33	41	M16×36	M12×28
BF5 180M(2)	279	72	354	342	241	331	121	211	180	22	401	147,5	15	678	793	37	TA 29	48	42	110	110	14	12	42,5	51,5	37	45	M16×36	M16×36
BF5 180L(2)	279	72	354	342	279	331	121	173	180	22	401	147,5	15	678	793	37	TA 29	48	42	110	110	14	12	42,5	51,5	37	45	M16×36	M16×36
BF5 200L(1)	318	75	388	381	305	366	133	210	200	25	442	155	19	753	868	47	TA 36	55	42	110	110	16	12	49	59	37	45	M20×42	M16×36
BF5 200L(2)	318	75	388	381	305	366	133	210	200	25	442	155	19	753	868	47	TA 36	55	55	110	110	16	16	49	59	49	59	M20×42	M20×42
BF5 225S(2)	356	81,5	416	381	286	371	149	229	225	28	467	155	19	799	914	47	TA 36	60	55	140	110	18	16	53	64	49	59	M20×42	M20×42
BF5 225M(1)	356	81,5	416	381	311	371	149	204	225	28	467	155	19	769	884	47	TA 36	55	42	110	110	16	12	49	59	37	45	M20×42	M16×36
BF5 225M(2)	356	81,5	416	381	311	371	149	204	225	28	467	155	19	799	914	47	TA 36	60	55	140	110	18	16	53	64	49	59	M20×42	M20×42

(1) 3000 RPM motors
(2) 1500, 1000 and 750 RPM motors

* Tolerances ISO: 38, 42 and 48 k 6 $\begin{pmatrix}+0{,}018\\+0{,}002\end{pmatrix}$; 55, and 60 m 6 $\begin{pmatrix}+0{,}030\\+0{,}011\end{pmatrix}$

FLANGE MOUNTED MOTORS

IM 3001; 3002; 3011; 3012; 3031; 3032

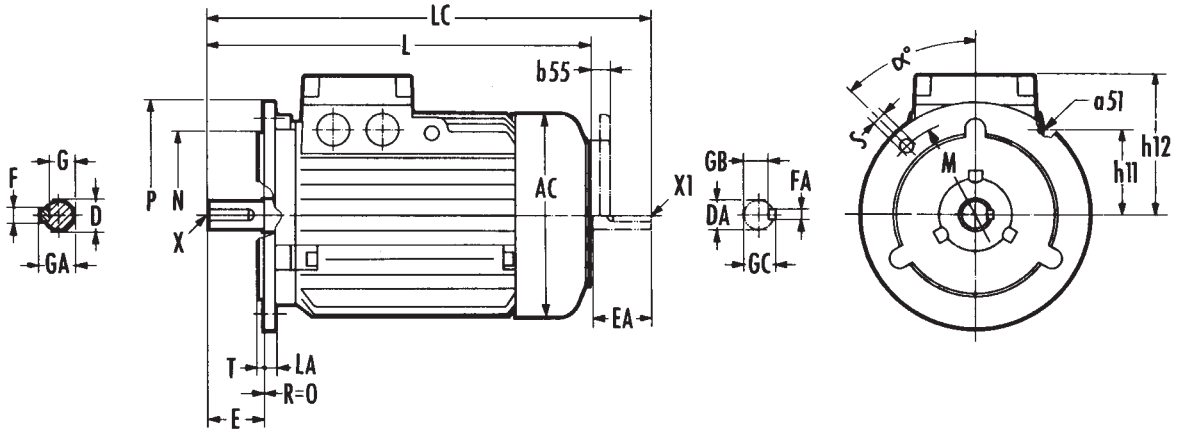

MOTOR TYPE	DIMENSIONS (mm)																													
	FLANGE DIMENSIONS										MAIN DIMENSIONS								SHAFT EXTENSIONS											
	Form IM	IEC	M	N	P	LA	T	α	No. holes	S	AC	h11	h12	L	LC	b55	a51 hole ϕ	a51 cable gland	D*	DA*	E	EA	F	FA	G	GA	GB	GC	X	X1
BF5 180M(1)	30 — —	F300	300	250	350	16	5	45°	4	19	342	147,5	221	678	763	45	37	TA 29	48	38	110	80	14	10	42,5	51,5	33	41	M16×36	M12×28
BF5 180MeL(2)	30 — —	F300	300	250	350	16	5	45°	4	19	342	147,5	221	678	793	45	37	TA 29	48	42	110	110	14	12	42,5	51,5	37	45	M16×36	M16×36
BF5 200L(1)	30 — —	F350	350	300	400	16	5	45°	4	19	381	155	242	753	868	50	47	TA 36	55	42	110	110	16	12	49	59	37	45	M20×42	M16×36
BF5 200L(2)	30 — —	F350	350	300	400	16	5	45°	4	19	381	155	242	753	868	50	47	TA 36	55	55	110	110	16	16	49	59	49	59	M20×42	M20×42
BF5 225SeM(2)	30 — —	F400	400	350	450	16	5	22° 30′	8	19	381	155	242	799	914	50	47	TA 36	60	55	140	110	18	16	53	64	49	59	M20×42	M20×42
BF5 225M(1)	30 — —	F400	400	350	450	16	5	22° 30′	8	19	381	155	242	769	884	50	47	TA 36	55	42	110	110	16	12	49	59	37	45	M20×42	M16×36

(1) 3000 RPM motors
(2) 1500, 1000 and 750 RPM motors

* Tolerances ISO: 38, 42 and 48 k 6 $\begin{pmatrix}+0{,}018\\+0{,}002\end{pmatrix}$; 55, and 60 m 6 $\begin{pmatrix}+0{,}030\\+0{,}011\end{pmatrix}$

TOTALLY ENCLOSED FAN-COOLED THREE-PHASE MOTORS

FOOT MOUNTED MOTORS

IM 1001; 1002; 1051; 1052; 1061; 1062; 1071; 1072; 1011; 1012; 1031; 1032

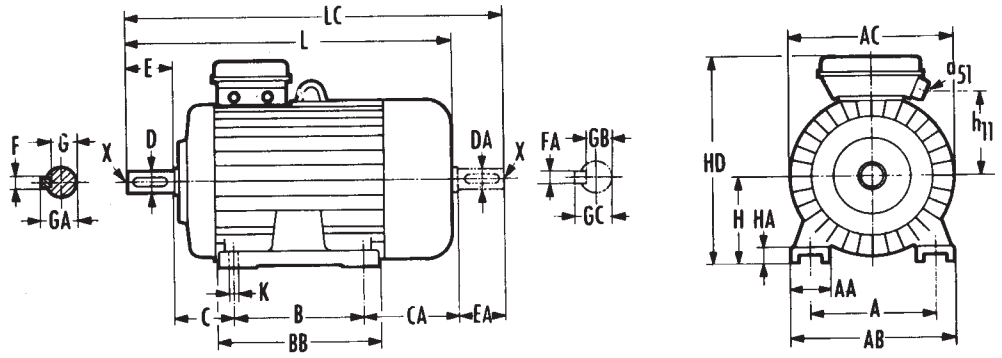

MOTOR TYPE	DIMENSIONS (mm)																										
																	SHAFT EXTENSIONS										
	A	AA	AB	AC	B	BB	C	CA	H	HA	HD	h11	K	L	LC	a51	D*	DA*	E	EA	F	FA	G	GA	GB	GC	X
BF4 250M(1)	406	100	506	484	349	406	168	206	250	32	685	261	24	856	1 003	TA 42	60	60	140	140	18	18	53	64	53	64	M20
BF4 250M(2)	406	100	506	484	349	406	168	206	250	32	685	261	24	856	1 003	TA 42	65	60	140	140	18	18	58	69	53	64	M20
BF4 280SA(1)	457	105	537	484	368	438	190	235	280	40	715	261	24	926	1 073	TA 42	65	65	140	140	18	18	58	69	58	69	M20
BF4 280SA(2)	457	105	537	484	368	438	190	235	280	40	715	261	24	926	1 073	TA 42	75	65	140	140	20	18	67,5	79,5	58	69	M20
BF4 280MA(1)	457	105	537	484	419	524	190	271	280	40	715	261	24	1 013	1 160	TA 42	65	65	140	140	18	18	58	69	58	69	M20
BF4 280MA(2)	457	105	537	484	419	524	190	271	280	40	715	261	24	1 013	1 160	TA 42	75	65	140	140	20	18	67,5	79,5	58	69	M20
BF4 315SA(1)	508	120	628	548	406	526	216	326	315	45	782	293	28	1 080	1 228	TA 48	65	65	140	140	18	18	58	69	58	69	M20
BF4 315SA(2)	508	120	628	548	406	526	216	326	315	45	782	293	28	1 110	1 258	TA 48	80	65	170	140	22	18	71	85	58	69	M20
BF4 315MA(1)	508	120	628	548	457	577	216	326	315	45	782	293	28	1 131	1 279	TA 48	65	65	140	140	18	18	58	69	58	69	M20
BF4 315MA(2)	508	120	628	548	457	577	216	326	315	45	782	293	28	1 161	1 309	TA 48	80	65	170	140	22	18	71	85	58	69	M20

(1) 2 poles
(2) 4 poles and more

* Tolerances ISO: 60, 65, 75 and 80 m 6 $\begin{pmatrix}+0{,}030\\+0{,}011\end{pmatrix}$

FLANGE MOUNTED MOTORS

FREE-GOING FIXING HOLES

IM 3011; 3012; 3031; 3032 (BF4 250 to BF4 315)

IM 3001; 3002 (motors BF4 250, and to express request to BF4 280 and BF4 315 motors)

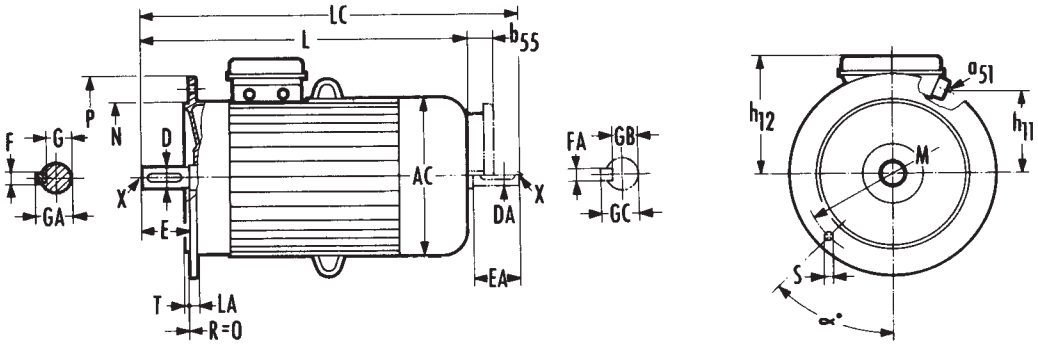

MOTORS TYPE	DIMENSIONS (mm)																										
	FLANGE DIMENSIONS										MAIN DIMENSIONS						SHAFT EXTENSIONS										
	Form	IEC	M	N	P	LA	T	α	No. holes	S	AC	h11	h12	L	LC	b55	a51	D*	DA*	E	EA	F	FA	G	GA	GB	GC	X
BF4 250M(1)	30 — —	F500	500	450	550	21	5	22° 30′	8	19	484	261	435	856	1 003	60	TA 42	60	60	140	140	18	18	53	64	53	64	M20
BF4 250M(2)	30 — —	F500	500	450	550	21	5	22° 30′	8	19	484	261	435	856	1 003	60	TA 42	65	60	140	140	18	18	58	69	53	64	M20
BF4 280SA(1)	30 — —	F500	500	450	550	21	5	22° 30′	8	19	484	261	435	926	1 073	60	TA 42	65	65	140	140	18	18	58	69	58	69	M20
BF4 280SA(2)	30 — —	F500	500	450	550	21	5	22° 30′	8	19	484	261	435	926	1 073	60	TA 42	75	65	140	140	20	18	67,5	79,5	58	69	M20
BF4 280MA(1)	30 — —	F500	500	450	550	21	5	22° 30′	8	19	484	261	435	1 013	1 160	60	TA 42	65	65	140	140	18	18	58	69	58	69	M20
BF4 280MA(2)	30 — —	F500	500	450	550	21	5	22° 30′	8	19	484	261	435	1 013	1 160	60	TA 42	75	65	140	140	20	18	67,5	79,5	58	69	M20
BF4 315SA(1)	30 — —	F600	600	550	660	25	6	22° 30′	8	24	548	293	467	1 080	1 228	70	TA 48	65	65	140	140	18	18	58	69	58	69	M20
BF4 315SA(2)	30 — —	F600	600	550	660	25	6	22° 30′	8	24	548	293	467	1 110	1 258	70	TA 48	80	65	170	140	22	18	71	85	58	69	M20
BF4 315MA(1)	30 — —	F600	600	550	660	25	6	22° 30′	8	24	548	293	467	1 131	1 279	70	TA 48	65	65	140	140	18	18	58	69	58	69	M20
BF4 315MA(2)	30 — —	F600	600	550	660	25	6	22° 30′	8	24	548	293	467	1 161	1 309	70	TA 48	80	65	170	140	22	18	71	85	58	69	M20

(1) 2 poles
(2) 4 poles and more

* Tolerances ISO: 60, 65, 75 and 80 m 6 $\begin{pmatrix}+0{,}030\\+0{,}011\end{pmatrix}$

DIMENSIONS

FOOT MOUNTED MOTORS
IM 1001; 1002

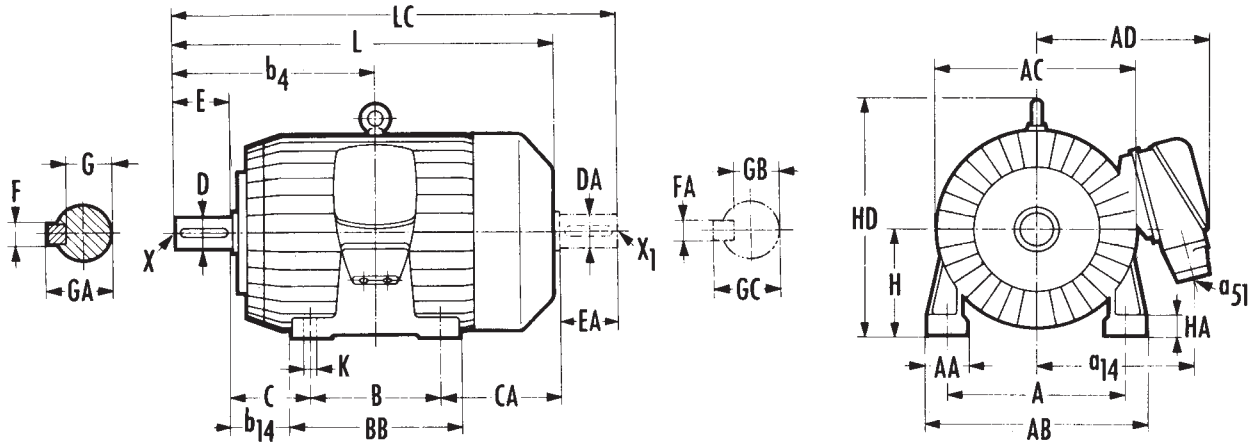

MOTOR TYPE	DIMENSIONS (mm)																													
																			SHAFT EXTENSIONS											
	A	AA	AB	AC	AD	a14	B	BB	b4	b14	C	CA	H	HA	HD	K	L	LC	a51	D*	DA*	E	EA	F	FA	G	GA	GB	GC	X	X1
BF3 315MA(1)	508	130	632	632	548	474	457	573	584,5	158	216	334	315	43	750	28	1 142	1 287	TA 48	70	70	140	140	20	20	62,5	74,5	62,5	74,5	M20	M20
BF3 315M(2)(3)	508	130	632	632	548	474	457	573	614,5	158	216	334	315	43	750	28	1 172	1 317	TA 48	90	70	170	140	25	20	81	95	62,5	74,5	M24	M20
BF3 355MA(1)	610	145	730	717	598	535	560	800	670	130	254	441	355	49	713,5	28	1 390	1 535	TA 48	70	70	140	140	20	20	62,5	74,5	62,5	74,5	M20	M20
BF3 280SA(2)	610	145	730	717	598	535	560	800	700	130	254	441	355	49	713,5	28	1 420	1 595	TA 48	95	95	170	170	25	25	86	100	86	100	M24	M24
BF3 400LA(1)	686	150	810	804	639	580	710	850	763	198	280	505	400	55	802	35	1 630	1 775	TA 48	70	70	140	140	20	20	62,5	74,5	62,5	74,5	M20	M20
BF3 400LA(2)	686	150	810	804	639	580	710	850	833	198	280	505	400	55	802	35	1 700	1 915	TA 48	110	110	210	210	28	28	100	116	100	116	M24	M24

(1) 2 poles: direct coupling
(2) 4 poles and more: direct coupling
(3) 4 poles and more: belt drive

* Tolerances ISO: 70 m 6 $\begin{pmatrix}+0{,}030\\+0{,}011\end{pmatrix}$; 90, 95 and 110 m 6 $\begin{pmatrix}+0{,}035\\+0{,}013\end{pmatrix}$

FLANGE MOUNTED MOTORS
FREE-GOING FIXING HOLES
IM 3011

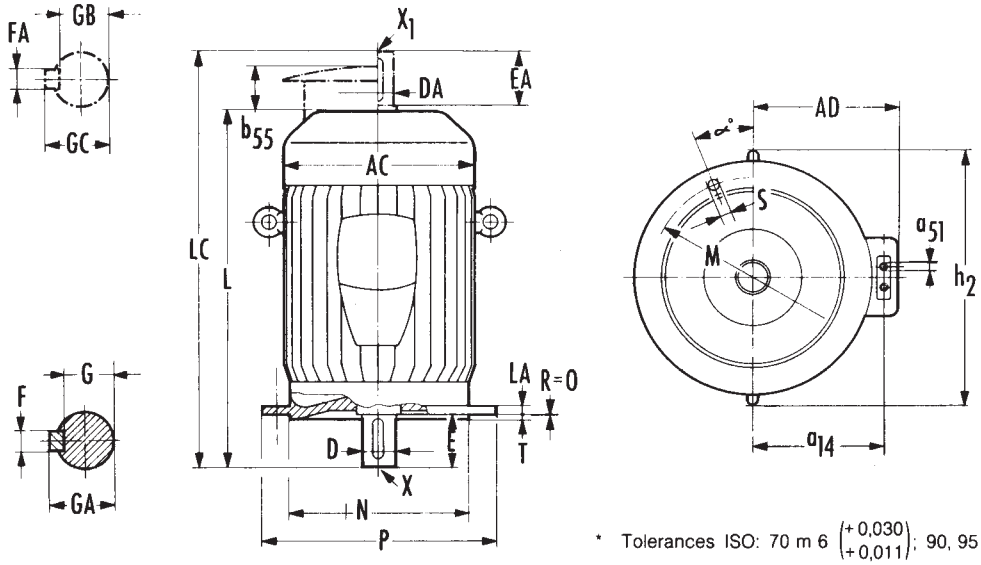

* Tolerances ISO: 70 m 6 $\begin{pmatrix}+0{,}030\\+0{,}011\end{pmatrix}$; 90, 95 and 110 m 6 $\begin{pmatrix}+0{,}035\\+0{,}013\end{pmatrix}$

MOTOR TYPE	DIMENSIONS (mm)																													
	FLANGE DIMENSIONS									MAIN DIMENSIONS								SHAFT EXTENSIONS												
	IEC	M	N	P	LA	T	α	No. holes	S	AC	AD	a14	h2	L	LC	b55	a51	D*	DA*	E	EA	F	FA	G	GA	GB	GC	X	X1
BF3 315MA(1)	F600	600	550	660	22	6	22° 30′	8	24	632	548	410	890	1 142	1 287	118	TA 48	70	70	140	140	20	20	62,5	74,5	62,5	74,5	M20	M20
BF3 315MA(2)(3)	F600	600	550	660	22	6	22° 30′	8	24	632	548	410	890	1 172	1 317	116,5	TA 48	90	70	170	140	25	20	81	95	62,5	74,5	M24	M20
BF3 355MA(1)	F740	740	680	800	25	6	22° 30′	8	24	717	598	456	928	1 390	1 535	124,5	TA 48	70	70	140	140	20	20	62,5	74,5	62,5	74,5	M20	M20
BF3 355MA(2)	F740	740	680	800	25	6	22° 30′	8	24	717	598	456	928	1 420	1 595	124,5	TA 48	95	95	170	170	25	25	86	100	86	100	M24	M24
BF3 400LA(1)	F940	940	880	1 000	28	6	22° 30′	8	28	804	639	500	1 010	1 630	1 775	131,5	TA 48	70	70	140	140	20	20	62,5	74,5	62,5	74,5	M20	M20
BF3 400LA(2)	F940	940	880	1 000	28	6	22° 30′	8	28	804	639	500	1 010	1 700	1 915	131,5	TA 48	100	100	210	210	28	28	100	116	100	116	M24	M24

DISC BRAKE MOTOR METRIC IEC STANDARD

60Hz* 3600RPM 2 Pole
250-280 or 440-480V
50Hz* 3000RPM 2 Pole
220-240V or 380-415V

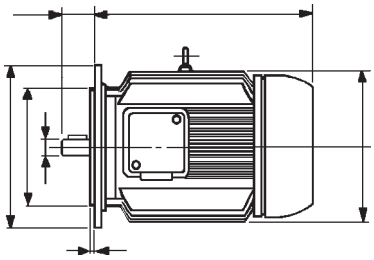

60Hz* 1800RPM 4 Pole
250-280 or 440-480V
50Hz* 1500RPM 4 Pole
220-240V or 380-415V

Part Number	Type Mount	kW	HP
BFF5 71M42	FOOT	0.37	0.50
BFF5 71M42	FOOT	0.55	0.74
BFF5 71M42	FLANGE	0.37	0.50
BFF5 71M42	FLANGE	0.55	0.74
BFF5 80M42	FOOT	0.75	1.01
BFF5 80M42	FOOT	1.1	1.47
BFF5 80M42	FLANGE	0.75	1.01
BFF5 80M42	FLANGE	1.1	1.47
BFF5 90S22	FOOT	1.5	2.01
BFF5 90L42	FOOT	2.2	2.95
BFF5 90S22	FLANGE	1.5	2.01
BFF5 90L42	FLANGE	2.2	2.95
BFF5 100L42	FOOT	3	4.02
BFF5 100L42	FLANGE	3	4.02
BFF5 112M22	FOOT	4	5.36
BFF5 112M22	FLANGE	4	5.36
BFF5 132S42	FOOT	5.5	7.37
BFF5 132S62	FOOT	7.5	10.05
BFF5 132S42	FLANGE	5.5	7.37
BFF5 132S62	FLANGE	7.5	10.05
BFF5 160M22	FOOT	11	14.75
BFF5 160M42	FOOT	15	20.11
BFF5 160L62	FOOT	18.5	24.80
BFF5 160M22	FLANGE	11	14.75
BFF5 160M42	FLANGE	15	20.11
BFF5 160L62	FLANGE	18.5	24.80

Part Number	Type Mount	kW	HP
BFF5 71M44	FOOT	0.18	0.24
BFF5 71M44	FOOT	0.25	0.34
BFF5 71M44	FOOT	0.37	0.50
BFF5 71M44	FLANGE	0.18	0.24
BFF5 71M44	FLANGE	0.25	0.34
BFF5 71M44	FLANGE	0.37	0.50
BFF5 80M44	FOOT	0.55	0.74
BFF5 80M44	FOOT	0.75	1.01
BFF5 80M44	FLANGE	0.55	0.74
BFF5 80M44	FLANGE	0.75	1.01
BFF5 90S24	FOOT	1.1	1.47
BFF5 90L44	FOOT	1.5	2.01
BFF5 90S24	FLANGE	1.1	1.47
BFF5 90L44	FLANGE	1.5	2.01
BFF5 100L24	FOOT	2.2	2.95
BFF5 100L44	FOOT	3	4.02
BFF5 100L24	FLANGE	2.2	2.95
BFF5 100L44	FLANGE	3	4.02
BFF5 112M44	FOOT	4	5.36
BFF5 112M44	FLANGE	4	5.36
BFF5 132S44	FOOT	5.5	7.37
BFF5 132M84	FOOT	7.5	10.05
BFF5 132S44	FLANGE	5.5	7.37
BFF5 132M84	FLANGE	7.5	10.05
BFF5 160M44	FOOT	11	14.75
BFF5 160L64	FOOT	15	20.11
BFF5 160M44	FLANGE	11	14.75
BFF5 160L64	FLANGE	15	20.11

* All Ametric® Motors are designed to operate domestically at 60Hz and for export at 50Hz (with a corresponding change in voltage and RPMs) and are available with either foot or flange mountings. For outputs lower than 3 kw △ terminals = 220-240V/250-280V 50/60Hz & Y terminals = 380-415V/440-480V 50/60Hz. For outputs greater than 3 kw only △ terminals available at 380-415V/440-480V 50/60Hz . (voltage variation -5% +6%)

DISC BRAKE MOTOR METRIC IEC STANDARD

60Hz* 1200RPM 6 Pole
250-280 or 440-480V
50Hz* 1000RPM 6 Pole
220-240V or 380-415V

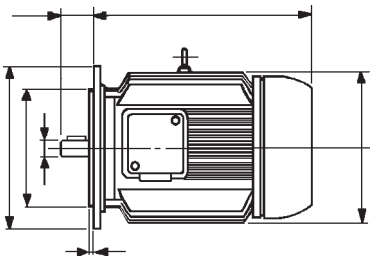

60Hz* 900RPM 8 Pole
250-280 or 440-480V
50Hz* 750RPM 8 Pole
220-240V or 380-415V

Part Number	Type Mount	kW	HP
BFF5 71M46	FOOT	0.12	0.16
BFF5 71M46	FOOT	0.185	0.25
BFF5 71M46	FOOT	0.25	0.34
BFF5 71M46	FLANGE	0.12	0.16
BFF5 71M46	FLANGE	0.185	0.25
BFF5 71M46	FLANGE	0.25	0.34
BFF5 80M46	FOOT	0.37	0.50
BFF5 80M66	FOOT	0.55	0.74
BFF5 80M46	FLANGE	0.37	0.50
BFF5 80M66	FLANGE	0.55	0.74
BFF5 90S26	FOOT	0.75	1.01
BFF5 90L66	FOOT	1.1	1.47
BFF5 90S26	FLANGE	0.75	1.01
BFF5 90L66	FLANGE	1.1	1.47
BFF5 100L46	FOOT	1.5	2.01
BFF5 100L46	FLANGE	1.5	2.01
BFF5 112M46	FOOT	2.2	2.95
BFF5 112M46	FLANGE	2.2	2.95
BFF5 132S86	FOOT	3	4.02
BFF5 132M86	FOOT	4	5.36
BFF5 132M86	FOOT	5.5	7.37
BFF5 132S86	FLANGE	3	4.02
BFF5 132M86	FLANGE	4	5.36
BFF5 132M86	FLANGE	5.5	7.37
BFF5 160M66	FOOT	7.5	10.05
BFF5 160L66	FOOT	11	14.75
BFF5 160M66	FLANGE	7.5	10.05
BFF5 160L66	FLANGE	11	14.75

Part Number	Type Mount	kW	HP
BFF5 71M48	FOOT	0.09	0.12
BFF5 71M48	FOOT	0.12	0.16
BFF5 71M48	FLANGE	0.09	0.12
BFF5 71M48	FLANGE	0.12	0.16
BFF5 80M48	FOOT	0.185	0.25
BFF5 80M68	FOOT	0.25	0.34
BFF5 80M48	FLANGE	0.185	0.25
BFF5 80M68	FLANGE	0.25	0.34
BFF5 90S28	FOOT	0.37	0.50
BFF5 90L68	FOOT	0.55	0.74
BFF5 90S28	FLANGE	0.37	0.50
BFF5 90L68	FLANGE	0.55	0.74
BFF5 100L48	FOOT	0.75	1.01
BFF5 100L48	FOOT	1.1	1.47
BFF5 100L48	FLANGE	0.75	1.01
BFF5 100L48	FLANGE	1.1	1.47
BFF5 112M48	FOOT	1.5	2.01
BFF5 112M48	FLANGE	1.5	2.01
BFF5 132S88	FOOT	2.2	2.95
BFF5 132M88	FOOT	3	4.02
BFF5 132S88	FLANGE	2.2	2.95
BFF5 132M88	FLANGE	3	4.02
BFF5 160M68	FOOT	4	5.36
BFF5 160M68	FOOT	5.5	7.37
BFF5 160L68	FOOT	7.5	10.05
BFF5 160M68	FLANGE	4	5.36
BFF5 160M68	FLANGE	5.5	7.37
BFF5 160L68	FLANGE	7.5	10.05

* All Ametric® Motors are designed to operate domestically at 60Hz and for export at 50Hz (with a corresponding change in voltage and RPMs) and are available with either foot or flange mountings. For outputs lower than 3 kw △ terminals = 220-240V/250-280V 50/60Hz & Y terminals = 380-415V/440-480V 50/60Hz. For outputs greater than 3 kw only △ terminals available at 380-415V/440-480V 50/60Hz . (voltage variation -5% +6%)

DISC BRAKE MOTOR

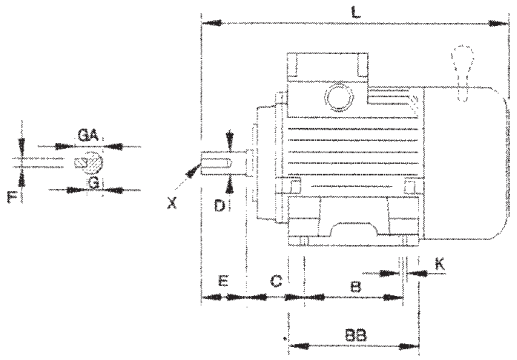

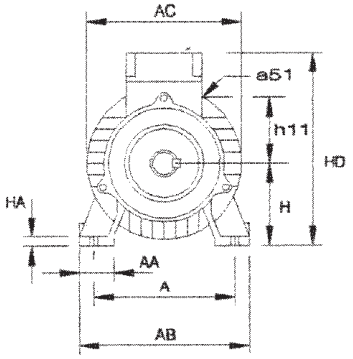

FOOT-MOUNTED MOTORS
IM1001; 1051; 1061; 1071; 1011; 1031

Type	Dimensions (mm)																				
														Shaft End						a51	
	A	AA	AB	AC	B	BB	C	H	HA	HD	h11	K	L	D	E	F	G	GA	X	Bore	Air-Gap
BFF5 71M	112	25	132	140	90	110	45	71	8	177	63	7	271	14	30	5	11	16	M4x10	22.5	0.2
BFF5 80M	125	27.5	150	157	100	120	50	80	9.5	192.5	68.5	10	304	19	40	6	15.5	21.5	M6x16	22.5	0.2
BFF5 90S	140	30	171	180	100	127	56	90	10	210	78.5	10	330	24	50	8	20	27	M8x19	22.5	0.2
BFF5 90L	140	30	171	180	125	152	56	90	10	210	78.5	10	355	24	50	8	20	27	M8x19	22.5	0.2
BFF5 100L	160	35	195	204	140	175	63	100	12	235.5	90.5	12	403	28	60	8	24	31	M10x22	28.5	0.2

FREE HOLES
IM 3001; 2011; 3031

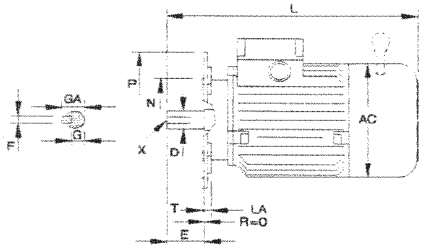

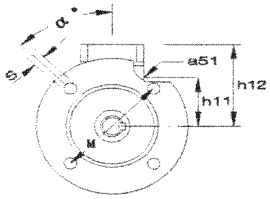

THREADED HOLES
IM 3601; 3611; 3631

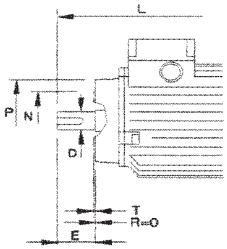

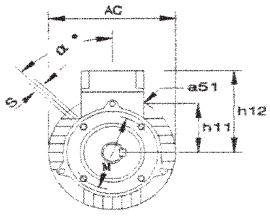

FLANGE-MOUNTED MOTORS

Type	Dimensions (mm)																				
														Shaft End						a51	
	IM	IEC	M	N	P	LA	T	a	S	AC	h11	h12	L	D	E	F	G	GA	X	Bore	Air-Gap
BFF5 71M	30	F130	130	110	160	8	3.5	45°	10	140	63	106	271	14	30	5	11	16	M14x0	22.5	0.2
	36	F85	85	70	105	--	2.5	45°	M6	140	63	106	271	14	30	5	11	16	M4x10	22.5	0.2
BFF5 80M	30	F165	165	130	200	8	3.5	45°	12	157	68.5	112.5	304	19	40	6	15.5	21.5	M6x16	22.5	0.2
	36	F100	100	80	120	--	3	45°	M6	157	68.5	112.5	304	19	40	6	15.5	21.5	M6x16	22.5	0.2
BFF5 90S	30	F165	165	130	200	10	3.5	45°	12	180	78.5	120	330	24	50	8	20	27	M8x19	22.5	0.2
	36	F115	115	95	140	--	3	45°	M8	180	78.5	120	330	24	50	8	20	27	M8x19	22.5	0.2
BFF5 90L	30	F165	165	130	200	10	3.5	45°	12	180	78.5	120	355	24	50	8	20	27	M8x19	22.5	0.2
	36	F115	115	95	140	--	3	45°	M8	180	78.5	120	355	24	50	8	20	27	Mx19	22.5	0.2
BFF5 100L	30	F215	215	180	250	12	4	45°	14.5	204	90.5	135.5	403	28	60	8	24	31	M10x22	28.5	0.2
	36	F130	130	110	160	--	3.5	45°	M8	204	90.5	135.5	403	28	60	8	24	31	M10x22	28.5	0.2

DISC BRAKE MOTOR

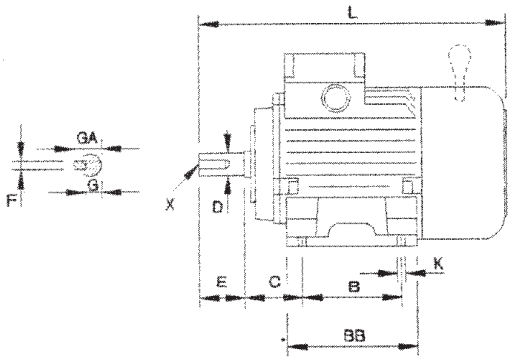

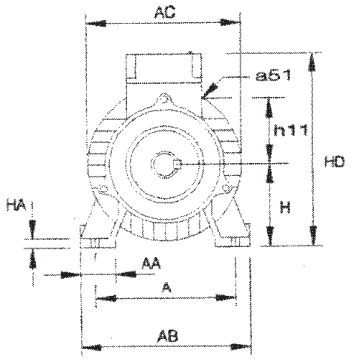

FOOT-MOUNTED MOTORS
IM1001; 1051; 1061; 1071; 1011; 1031

Type	Dimensions (mm)																				
														Shaft End						a51	
	A	AA	AB	AC	B	BB	C	H	HA	HD	h11	K	L	D	E	F	G	GA	X	Bore	Air-Gap
BFF5 112M	190	40	220	218	140	175	70	112	12	257.5	88	12	493	28	60	8	24	31	M10x22	2x28.5	0.4
BFF5 132S	216	52	260	254	140	218	89	132	16	295	103	12	569	38	80	10	33	41	M12x28	2x28.5	0.5
BFF5 132M	216	52	260	254	178	218	89	132	16	295	103	12	569	38	80	10	33	41	M12x28	2x28.5	0.5
BFF5 160M	254	60	300	303	210	300	108	160	18	356	120	15	711	42	110	12	37	45	M16x36	2x37	0.5
BFF5 160L	254	60	300	303	254	300	108	160	18	356	120	15	711	42	110	12	37	45	M16x36	2x37	0.5

FREE HOLES
IM 3001; 2011; 3031

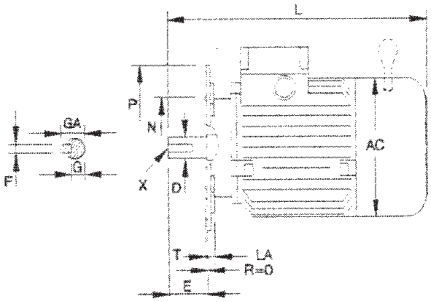

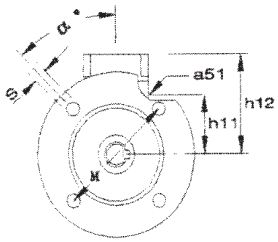

THREADED HOLES
IM 3601; 3611; 3631

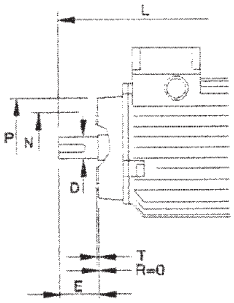

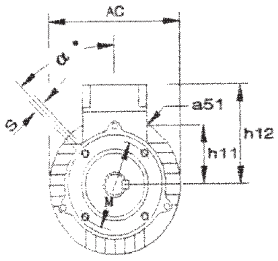

FLANGE-MOUNTED MOTORS

Type	Dimensions (mm)																				
														Shaft End						a51	
	IM	IEC	M	N	P	LA	T	a	S	AC	h11	h12	L	D	E	F	G	GA	X	Bore	Air-Gap
BFF5 112M	30	F215	215	180	250	12	4	45°	14.5	218	88	145.5	493	28	60	8	24	31	M10x22	2x28.5	0.2
	36	F130	130	110	160	--	3.5	45°	M8	218	88	145.5	493	28	60	8	24	31	M10x22	2x28.5	0.2
BFF5 132S/M	30	F265	265	230	300	12	4	45°	14.5	254	103	163	569	38	80	10	33	41	M12x28	2x28.5	0.2
	36	F165	165	130	195	--	3.5	45°	M10	254	103	163	569	38	80	10	33	41	M12x28	2x28.5	0.2
BFF5 160M/L	30	F300	300	250	350	13	5	45°	18.5	303	120	196	711	42	110	12	37	45	M16x36	2x37	0.2

EXPLOSION PROOF MOTOR METRIC IEC STANDARD

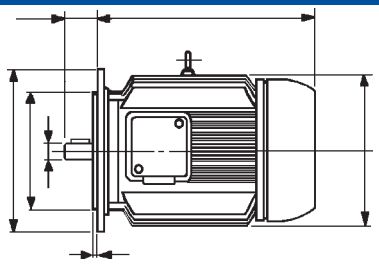

60Hz* 3600RPM 2 Pole 250-280 or 440-480V

Part Number	Type Mount	kW	HP	Weight kg
BFGC3 90 S32	foot	0.55	0.74	30
BFGC3 90 S32	foot	0.75	1.01	30
BFGC3 90 S32	foot	1.10	1.47	30
BFGC3 90 S32	foot	1.50	2.01	30
BFGC3 90 L52	foot	2.20	2.95	40
BFGC3 100 L22A	foot	3.00	4.02	50
BFGC3 112 M22	foot	4.00	5.36	65
BFGC3 132 S22	foot	5.50	7.37	85
BFGC3 132 S42	foot	7.50	10.05	90
BFGC3 160 M22	foot	11.00	14.75	120
BFGC3 160 M42	foot	15.00	20.11	135
BFGC3 160 L62	foot	18.50	24.80	160
BFGC3 180 M42	foot	22.00	29.49	205
BFGC3 200 L22	foot	30.00	40.21	275
BFGC3 200 L42	foot	37.00	49.60	290
BFGC4 225 M42	foot	45.00	60.32	350
BFGC4 250 M42	foot	55.00	73.73	450
BFGC4 280 SA42	foot	75.00	100.54	575
BFGC4 280 MA62	foot	90.00	120.64	620
BFGC4 315 SA42	foot	110.00	147.45	810
BFGC4 315 MA62	foot	132.00	176.94	890
BFGC3 315 MA62	foot	160.00	214.48	1150
BFGC3 315 MA82	foot	200.00	268.10	1250
BFGC3 355 MA22	foot	220.00	294.91	1550
BFGC3 355 MA42	foot	260.00	348.53	1800
BFGC3 355 MA62	foot	290.00	388.74	1875
BFGC3 355 MA82	foot	330.00	442.36	1950
BFGC3 400 LA42	foot	370.00	495.98	2650
BFGC3 400 LA62	foot	400.00	536.19	2800
BFGC3 400 LA82	foot	440.00	589.81	2900

50Hz* 3000RPM 2 Pole 220-240V or 380-415V

Part Number	Type Mount	kW	HP	Weight kg
BFGC3 90 S32	flange	0.55	0.74	30
BFGC3 90 S32	flange	0.75	1.01	30
BFGC3 90 S32	flange	1.10	1.47	30
BFGC3 90 S32	flange	1.50	2.01	30
BFGC3 90 L52	flange	2.20	2.95	40
BFGC3 100 L22A	flange	3.00	4.02	50
BFGC3 112 M22	flange	4.00	5.36	65
BFGC3 132 S22	flange	5.50	7.37	85
BFGC3 132 S42	flange	7.50	10.05	90
BFGC3 160 M22	flange	11.00	14.75	120
BFGC3 160 M42	flange	15.00	20.11	135
BFGC3 160 L62	flange	18.50	24.80	160
BFGC3 180 M42	flange	22.00	29.49	205
BFGC3 200 L22	flange	30.00	40.21	275
BFGC3 200 L42	flange	37.00	49.60	290
BFGC4 225 M42	flange	45.00	60.32	350
BFGC4 250 M42	flange	55.00	73.73	450
BFGC4 280 SA42	flange	75.00	100.54	575
BFGC4 280 MA62	flange	90.00	120.64	620
BFGC4 315 SA42	flange	110.00	147.45	810
BFGC4 315 MA62	flange	132.00	176.94	890
BFGC3 315 MA62	flange	160.00	214.48	1150
BFGC3 315 MA82	flange	200.00	268.10	1250
BFGC3 355 MA22	flange	220.00	294.91	1550
BFGC3 355 MA42	flange	260.00	348.53	1800
BFGC3 355 MA62	flange	290.00	388.74	1875
BFGC3 355 MA82	flange	330.00	442.36	1950
BFGC3 400 LA42	flange	370.00	495.98	2650
BFGC3 400 LA62	flange	400.00	536.19	2800
BFGC3 400 LA82	flange	440.00	589.81	2900

* All Ametric® Motors are designed to operate domestically at 60Hz and for export at 50Hz (with a corresponding change in voltage and RPMs) and are available with either foot or flange mountings. For outputs lower than 3 kw △ terminals = 220-240V/250-280V 50/60Hz & Y terminals = 380-415V/440-480V 50/60Hz. For outputs greater than 3 kw only △ terminals available at 380-415V/440-480V 50/60Hz . (voltage variation -5% +6%)

Flame-Proof Standards

All Ametric® BFGC Motors satisfy EN 50014, 50018 European standards for the IIC group of gases in the T4 temperature range. They are fitted with EEx d IIC flameproof terminal boxes.

EXPLOSION PROOF MOTOR METRIC IEC STANDARD

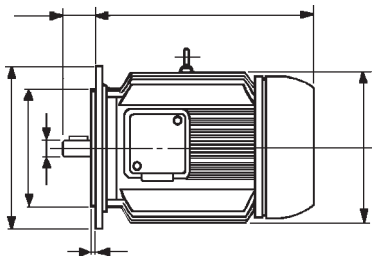

60Hz* 1800RPM 4 Pole 250-280 or 440-480V

Part Number	Type Mount	kW	HP	Weight kg
BFGC3 90 S34	foot	0.37	0.50	30
BFGC3 90 S34	foot	0.55	0.74	30
BFGC3 90 S34	foot	0.75	1.01	30
BFGC3 90 S34	foot	1.10	1.47	30
BFGC3 90 L44A	foot	1.50	2.01	35
BFGC3 100 L34A	foot	2.20	2.95	45
BFGC3 100 L54A	foot	3.00	4.02	50
BFGC3 112 M44	foot	4.00	5.36	60
BFGC3 132 S44	foot	5.50	7.37	85
BFGC3 132 M44	foot	7.50	10.05	85
BFGC3 160 M44	foot	11.00	14.75	140
BFGC3 160 L64	foot	15.00	20.11	160
BFGC3 180 M44	foot	18.50	24.80	210
BFGC3 180 L64	foot	22.00	29.49	230
BFGC3 200 L44	foot	30.00	40.21	290
BFGC3 225 S24	foot	37.00	49.60	315
BFGC3 225 M44	foot	45.00	60.32	340
BFGC4 250 M44	foot	55.00	73.73	465
BFGC4 280 SA44	foot	75.00	100.54	600
BFGC4 280 MA84	foot	90.00	120.64	650
BFGC4 315 SA44	foot	110.00	147.45	815
BFGC4 315 MA64	foot	132.00	176.94	895
BFGC3 315 MA64	foot	160.00	214.48	1250
BFGC3 315 MA84	foot	200.00	268.10	1350
BFGC3 355 MA24	foot	220.00	294.91	1950
BFGC3 355 MA44	foot	260.00	348.53	2075
BFGC3 355 MA64	foot	290.00	388.74	2200
BFGC3 355 MA84	foot	315.00	422.25	2250
BFGC3 400 LA24	foot	330.00	442.36	2770
BFGC3 400 LA44	foot	370.00	495.98	2500
BFGC3 400 LA64	foot	400.00	536.19	3025
BFGC3 400 LA84	foot	440.00	589.81	3200

50Hz* 1500RPM 4 Pole 220-240V or 380-415V

Part Number	Type Mount	kW	HP	Weight kg
BFGC3 90 S34	flange	0.37	0.50	30
BFGC3 90 S34	flange	0.55	0.74	30
BFGC3 90 S34	flange	0.75	1.01	30
BFGC3 90 S34	flange	1.10	1.47	30
BFGC3 90 L44A	flange	1.50	2.01	35
BFGC3 100 L34A	flange	2.20	2.95	45
BFGC3 100 L54A	flange	3.00	4.02	50
BFGC3 112 M44	flange	4.00	5.36	60
BFGC3 132 S44	flange	5.50	7.37	85
BFGC3 132 M44	flange	7.50	10.05	85
BFGC3 160 M44	flange	11.00	14.75	140
BFGC3 160 L64	flange	15.00	20.11	160
BFGC3 180 M44	flange	18.50	24.80	210
BFGC3 180 L64	flange	22.00	29.49	230
BFGC3 200 L44	flange	30.00	40.21	290
BFGC3 225 S24	flange	37.00	49.60	315
BFGC3 225 M44	flange	45.00	60.32	340
BFGC4 250 M44	flange	55.00	73.73	465
BFGC4 280 SA44	flange	75.00	100.54	600
BFGC4 280 MA84	flange	90.00	120.64	650
BFGC4 315 SA44	flange	110.00	147.45	815
BFGC4 315 MA64	flange	132.00	176.94	895
BFGC3 315 MA64	flange	160.00	214.48	1250
BFGC3 315 MA84	flange	200.00	268.10	1350
BFGC3 355 MA24	flange	220.00	294.91	1950
BFGC3 355 MA44	flange	260.00	348.53	2075
BFGC3 355 MA64	flange	290.00	388.74	2200
BFGC3 355 MA84	flange	315.00	422.25	2250
BFGC3 400 LA24	flange	330.00	442.36	2770
BFGC3 400 LA44	flange	370.00	495.98	2500
BFGC3 400 LA64	flange	400.00	536.19	3025
BFGC3 400 LA84	flange	440.00	589.81	3200

* All Ametric® Motors are designed to operate domestically at 60Hz and for export at 50Hz (with a corresponding change in voltage and RPMs) and are available with either foot or flange mountings. For outputs lower than 3 kw △ terminals = 220-240V/250-280V 50/60Hz & Y terminals = 380-415V/440-480V 50/60Hz. For outputs greater than 3 kw only △ terminals available at 380-415V/440-480V 50/60Hz . (voltage variation -5% +6%)

Flame-Proof Standards

All Ametric® BFGC Motors satisfy EN 50014, 50018 European standards for the IIC group of gases in the T4 temperature range. They are fitted with EEx d IIC flameproof terminal boxes.

EXPLOSION PROOF MOTOR METRIC IEC STANDARD

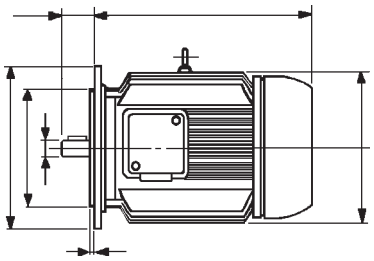

60Hz* 1200RPM 6 Pole 250-280 or 440-480V

Part Number	Type Mount	kW	HP	Weight kg
BFGC3 90 S36A	foot	0.37	0.50	30
BFGC3 90 S36A	foot	0.55	0.74	30
BFGC3 90 S36A	foot	0.75	1.01	30
BFGC3 90 L66	foot	1.10	1.47	45
BFGC3 100 L16A	foot	1.50	2.01	50
BFGC3 112 M46	foot	2.20	2.95	60
BFGC3 132 S26	foot	3.00	4.02	80
BFGC3 132 M46	foot	4.00	5.36	90
BFGC3 132 M86	foot	5.50	7.37	110
BFGC3 160 M40	foot	7.50	10.05	140
BFGC3 160 L86	foot	11.00	14.75	165
BFGC3 180 L46	foot	15.00	20.11	200
BFGC3 200 L26	foot	18.50	24.80	260
BFGC3 200 L46	foot	22.00	29.49	310
BFGC4 225 M46	foot	30.00	40.21	390
BFGC4 250 M26	foot	37.00	49.60	450
BFGC4 280 SA26	foot	45.00	60.32	610
BFGC4 280 MA46	foot	55.00	73.73	650
BFGC4 315 SA46	foot	75.00	100.54	740
BFGC4 315 MA66	foot	90.00	120.64	836
BFGC3 315 MA66	foot	110.00	147.45	1125
BFGC3 315 MA86	foot	132.00	176.94	1225
BFGC3 315 MA106	foot	160.00	214.48	1350
BFGC3 355 MA66	foot	200.00	268.10	2025
BFGC3 355 MA86	foot	250.00	335.12	2150
BFGC3 400 LA66	foot	290.00	388.74	3025
BFGC3 400 LA86	foot	330.00	442.36	3175

50Hz* 1000RPM 6 Pole 220-240V or 380-415V

Part Number	Type Mount	kW	HP	Weight kg
BFGC3 90 S36A	flange	0.37	0.50	30
BFGC3 90 S36A	flange	0.55	0.74	30
BFGC3 90 S36A	flange	0.75	1.01	30
BFGC3 90 L66	flange	1.10	1.47	45
BFGC3 100 L16A	flange	1.50	2.01	50
BFGC3 112 M46	flange	2.20	2.95	60
BFGC3 132 S26	flange	3.00	4.02	80
BFGC3 132 M46	flange	4.00	5.36	90
BFGC3 132 M86	flange	5.50	7.37	110
BFGC3 160 M40	flange	7.50	10.05	140
BFGC3 160 L86	flange	11.00	14.75	165
BFGC3 180 L46	flange	15.00	20.11	200
BFGC3 200 L26	flange	18.50	24.80	260
BFGC3 200 L46	flange	22.00	29.49	310
BFGC4 225 M46	flange	30.00	40.21	390
BFGC4 250 M26	flange	37.00	49.60	450
BFGC4 280 SA26	flange	45.00	60.32	610
BFGC4 280 MA46	flange	55.00	73.73	650
BFGC4 315 SA46	flange	75.00	100.54	740
BFGC4 315 MA66	flange	90.00	120.64	836
BFGC3 315 MA66	flange	110.00	147.45	1125
BFGC3 315 MA86	flange	132.00	176.94	1225
BFGC3 315 MA106	flange	160.00	214.48	1350
BFGC3 355 MA66	flange	200.00	268.10	2025
BFGC3 355 MA86	flange	250.00	335.12	2150
BFGC3 400 LA66	flange	290.00	388.74	3025
BFGC3 400 LA86	flange	330.00	442.36	3175

* All Ametric® Motors are designed to operate domestically at 60Hz and for export at 50Hz (with a corresponding change in voltage and RPMs) and are available with either foot or flange mountings. For outputs lower than 3 kw △ terminals = 220-240V/250-280V 50/60Hz & Y terminals = 380-415V/440-480V 50/60Hz. For outputs greater than 3 kw only △ terminals available at 380-415V/440-480V 50/60Hz . (voltage variation -5% +6%)

Flame-Proof Standards

All Ametric® BFGC Motors satisfy EN 50014, 50018 European standards for the IIC group of gases in the T4 temperature range. They are fitted with EEx d IIC flameproof terminal boxes.

EXPLOSION PROOF MOTOR METRIC IEC STANDARD

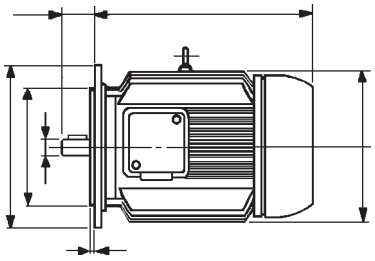

60Hz* 900RPM 8 Pole 250-280 or 440-480V

Part Number	Type Mount	kW	HP	Weight kg
BFGC3 90 S48	foot	0.37	0.50	40
BFGC3 90 L68	foot	0.55	0.74	45
BFGC3 100 L38A	foot	0.75	1.01	50
BFGC3 100 L58A	foot	1.10	1.47	55
BFGC3 112 M48	foot	1.50	2.01	60
BFGC3 132 S28	foot	2.20	2.95	80
BFGC3 132 M42	foot	3.00	4.02	92
BFGC3 160 M28	foot	4.00	5.36	135
BFGC3 160 M48	foot	5.50	7.37	140
BFGC3 160 L68	foot	7.50	10.05	165
BFGC3 180 L48	foot	11.00	14.75	200
BFGC3 200 L28	foot	15.00	20.11	260
BFGC3 225 S28	foot	18.50	24.80	350
BFGC3 225 M48	foot	22.00	29.49	400
BFGC4 250 M48	foot	30.00	40.21	450
BFGC4 280 SA48	foot	37.00	49.60	610
BFGC4 280 MA68	foot	45.00	60.32	630
BFGC4 315 SA48	foot	55.00	73.73	740
BFGC4 315 MA68	foot	75.00	100.54	830
BFGC3 315 MA68	foot	100.00	134.05	1175
BFGC3 315 MA88	foot	110.00	147.45	1250
BFGC3 315 MA108	foot	132.00	176.94	1300
BFGC3 355 MA48	foot	150.00	201.07	2000
BFGC3 355 MA68	foot	185.00	247.99	2200
BFGC3 355 MA88	foot	220.00	294.91	2400
BFGC3 400 LA68	foot	260.00	348.53	3000
BFGC3 400 LA88	foot	290.00	388.74	3200

50Hz* 750RPM 8 Pole 220-240V or 380-415V

Part Number	Type Mount	kW	HP	Weight kg
BFGC3 90 S48	flange	0.37	0.50	40
BFGC3 90 L68	flange	0.55	0.74	45
BFGC3 100 L38A	flange	0.75	1.01	50
BFGC3 100 L58A	flange	1.10	1.47	55
BFGC3 112 M48	flange	1.50	2.01	60
BFGC3 132 S28	flange	2.20	2.95	80
BFGC3 132 M42	flange	3.00	4.02	92
BFGC3 160 M28	flange	4.00	5.36	135
BFGC3 160 M48	flange	5.50	7.37	140
BFGC3 160 L68	flange	7.50	10.05	165
BFGC3 180 L48	flange	11.00	14.75	200
BFGC3 200 L28	flange	15.00	20.11	260
BFGC3 225 S28	flange	18.50	24.80	350
BFGC3 225 M48	flange	22.00	29.49	400
BFGC4 250 M48	flange	30.00	40.21	450
BFGC4 280 SA48	flange	37.00	49.60	610
BFGC4 280 MA68	flange	45.00	60.32	630
BFGC4 315 SA48	flange	55.00	73.73	740
BFGC4 315 MA68	flange	75.00	100.54	830
BFGC3 315 MA68	flange	100.00	134.05	1175
BFGC3 315 MA88	flange	110.00	147.45	1250
BFGC3 315 MA108	flange	132.00	176.94	1300
BFGC3 355 MA48	flange	150.00	201.07	2000
BFGC3 355 MA68	flange	185.00	247.99	2200
BFGC3 355 MA88	flange	220.00	294.91	2400
BFGC3 400 LA68	flange	260.00	348.53	3000
BFGC3 400 LA88	flange	290.00	388.74	3200

* All Ametric® Motors are designed to operate domestically at 60Hz and for export at 50Hz (with a corresponding change in voltage and RPMs) and are available with either foot or flange mountings. For outputs lower than 3 kw △ terminals = 220-240V/250-280V 50/60Hz & Y terminals = 380-415V/440-480V 50/60Hz. For outputs greater than 3 kw only △ terminals available at 380-415V/440-480V 50/60Hz . (voltage variation -5% +6%)

Flame-Proof Standards

All Ametric® BFGC Motors satisfy EN 50014, 50018 European standards for the IIC group of gases in the T4 temperature range. They are fitted with EEx d IIC flameproof terminal boxes.

SHORT-CIRCUIT ROTOR
LOW VOLTAGE
BFGC3 90 to 225 and BFGC4 250 to 315A Motors

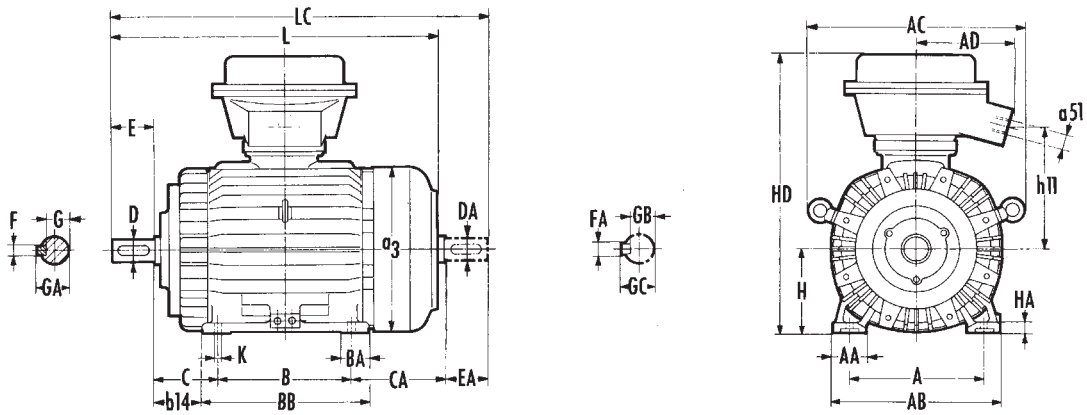

FOOT-MOUNTED MOTORS - IM 1001 Layout

MOTOR TYPE	DIMENSIONS (mm)																				SHAFT EXTENSIONS									
	A	AA	AB	AC	AD	a3	B	BA	BB	b14	C	CA	H	HA	HD	h11	k	L	LC	a51 **	D *	DA*	E	EA	F	FA	G	GB	GA	GC
BFGC3 90 S	140	40	170	—	143,5	181	100	—	120	46	56	106	90	10	333	156	10	309	362		24	24	50	50	8	8	20	20	27	27
BFGC3 90 L	140	40	170	—	143,5	181	125	—	145	46	56	106	90	10	333	156	10	334	387	1 hole	24	24	50	50	8	8	20	20	27	27
BFGC3 100 L	160	45	190	—	143,5	201	140	—	166	50	63	119	100	14	358	171	12	378	442	M20×1,5	28	28	60	60	8	8	24	24	31	31
BFGC3 112 M	190	50	230	—	143,5	224	140	—	190	52	70	150	112	18	379	180	12	415	480		28	28	60	60	8	8	24	24	31	31
BFGC3 132 S (1)	216	58	260	363	168	261	140	—	190	64	89	190	132	20	453	213	12	494	579		38	38	80	80	10	10	33	33	41	41
BFGC3 132 S (2)	216	58	260	363	168	261	140	—	190	64	89	190	132	20	453	213	12	494	579		38	28	80	80	10	8	33	24	41	31
BFGC3 132 M (1)	216	58	260	363	168	261	178	—	228	64	89	190	132	20	453	213	12	532	617	1 hole	38	38	80	80	10	10	33	33	41	41
BFGC3 132 M (2)	216	58	260	363	168	261	178	—	228	64	89	190	132	20	453	213	12	532	617	M25×1,5	38	28	80	80	10	8	33	24	41	31
BFGC3 160 M	254	68	314	412	168	314	210	—	270	78	108	173	160	25	503	235	15	596	681		42	38	110	80	12	10	37	33	45	41
BFGC3 160 L	254	68	314	412	168	314	254	—	314	78	108	173	160	25	503	235	15	640	725		42	38	110	80	12	10	37	33	45	41
BFGC3 180 M (1)	279	75	354	427	200,5	357	241	—	316	83,5	121	202,5	180	25	587	258	15	669,5	784,5	1 hole	48	42	110	110	14	12	42,5	37	51,5	45
BFGC3 180 M (2)	279	75	354	427	200,5	357	241	—	316	83,5	121	202,5	180	25	587	258	15	669,5	754,5	M32×1,5	48	38	110	80	14	10	42,5	33	51,5	41
BFGC3 180 L (1)	279	75	354	427	200,5	357	279	—	354	83,5	121	202,5	180	25	587	258	15	707,5	822,5		48	42	110	110	14	12	42,5	37	51,5	45
BFGC3 200 L	318	80	400	480	200,5	394	305	—	378	96,5	133	213,5	200	30	619	270	19	756,5	871,5		55	55	110	110	16	16	49	49	59	59
BFGC3 225 S (1)	356	80	432	480	200,5	394	286	—	378	106,5	149	226,5	225	30	644	270	19	796,5	911,5		60	55	140	110	18	16	53	49	64	59
BFGC3 225 M (1)	356	80	432	480	200,5	394	311	—	378	106,5	149	201,5	225	30	644	270	19	796,5	911,5	1 hole	60	55	140	110	18	16	53	49	64	59
BFGC3 225 M (2)	356	80	432	480	200,5	394	311	—	378	106,5	149	201,5	225	30	644	270	19	766,5	881,5	M40×1,5	55	55	110	110	16	16	49	49	59	59
BFGC4 250 M (1)	406	100	506	—	244	484	349	—	406	139,5	168	206	250	32	748	307	24	856	1003		65	65	140	140	18	18	58	58	69	69
BFGC4 250 M (2)	406	100	506	—	244	484	349	—	406	139,5	168	206	250	32	748	307	24	856	1003		60	60	140	140	18	18	53	53	64	64
BFGC4 280 SA (1)	457	105	537	—	244	484	368	—	438	155	190	235	280	40	778	307	24	926	1073		75	65	140	140	20	18	67,5	58	79,5	69
BFGC4 280 SA (2)	457	105	537	—	244	484	368	—	438	155	190	235	280	40	778	307	24	926	1073	1 hole	65	65	140	140	18	18	58	58	69	69
BFGC4 280 MA (1)	457	105	537	—	244	484	419	—	525	155	190	271	280	40	778	307	24	1013	1160	M50×1,5	75	65	140	140	20	18	67,5	58	79,5	69
BFGC4 280 MA (2)	457	105	537	—	244	484	419	—	525	155	190	271	280	40	778	307	24	1013	1160		65	65	140	140	18	18	58	58	69	69
BFGC4 315 SA (1)	508	120	628	—	244	549,5	406	120	526	156	216	326	315	45	845	339	28	1110	1258		80	65	170	140	22	18	71	58	85	69
BFGC4 315 SA (2)	508	120	628	—	244	549,5	406	120	526	156	216	326	315	45	845	339	28	1080	1228	1 hole	65	65	140	140	18	18	58	58	69	69
BFGC4 315 MA (1)	508	120	628	—	244	549,5	457	120	577	156	216	326	315	45	845	339	28	1161	1039	M63×1,5	80	65	170	140	22	18	71	58	85	69
BFGC4 315 MA (2)	508	120	628	—	244	549,5	457	120	577	156	216	326	315	45	845	339	28	1131	1279		65	65	140	140	18	18	58	58	69	69

* ISO tolerances: 24 and 28 j 6 $\left(\begin{smallmatrix}+0.009\\-0.004\end{smallmatrix}\right)$; 38, 42 and 48 k 6 $\left(\begin{smallmatrix}+0.018\\+0.002\end{smallmatrix}\right)$; 55, 60, 65, 75 and 80 m 6 $\left(\begin{smallmatrix}+0.030\\+0.011\end{smallmatrix}\right)$

** Standard model sizes

(1) 1500, 1000 and 750 RPM motors

(2) 3000 RPM motors

FLAME-PROOF TYPE (BFGC3 315A to 400A Motors)

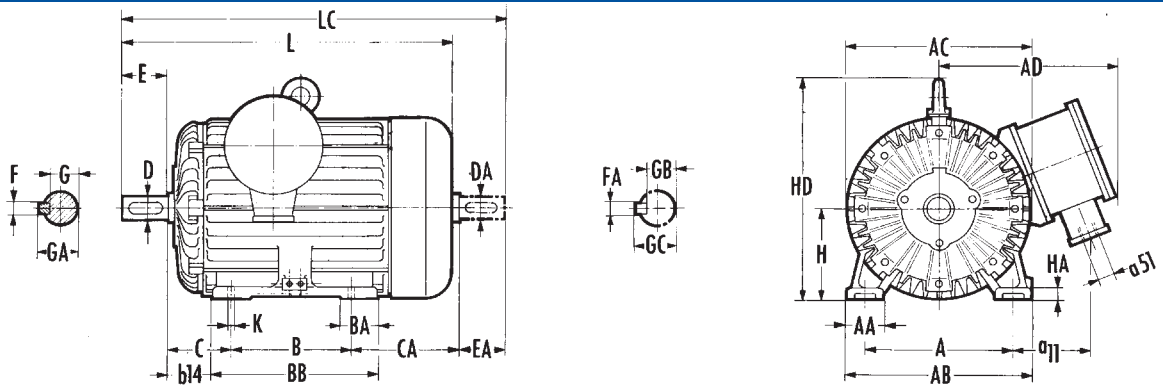

FOOT-MOUNTED MOTORS - IM 1001 Layout

MOTOR TYPE	DIMENSIONS (mm)																											
																				SHAFT EXTENSIONS								
	A	AA	AB	AC	AD	a11	B	BA	BB	b14	C	CA	H	HA	HD	k	L	LC	a51	D *	DA *	E	EA	F	FA	G	GB	GA	GC
BFGC3 315 MA (1)	508	130	632	632	690	345	457	150	613	165	216	391	315	43	772	28	1238	1413	1 hole	90	70	170	140	25	20	81	62,5	95	74,5
BFGC3 315 MA (2)	508	130	632	632	690	345	457	150	613	165	216	391	315	43	772	28	1208	1353	M63×1,5	70	70	140	140	20	20	62,5	62,5	74,5	74,5
BFGC3 355 MA (1)	610	145	730	718	742	333	560	175	800	156	254	487	355	49	783(3)	28	1466	1641		95	95	170	170	25	25	86	86	100	100
BFGC3 355 MA (2)	610	145	730	718	742	333	560	175	800	156	254	487	355	49	783(3)	28	1436	1581	2 holes	70	70	140	140	20	20	62,5	62,5	74,5	74,5
BFGC3 400 LA (1)	686	150	810	804	787	340	710	175	850	221	280	548	400	55	858(3)	35	1743	1958	M63×1,5	110	110	210	210	28	28	100	100	116	116
BFGC3 400 LA (2)	686	150	810	804	787	340	710	175	850	221	280	548	400	55	858(3)	35	1673	1818		70	70	140	140	20	20	62,5	62,5	74,5	74,5

* ISO Tolerance: 65, 70 and 80 m 6 $\left(\begin{smallmatrix}+0,030\\+0,011\end{smallmatrix}\right)$; 95 and 110 m 6 $\left(\begin{smallmatrix}+0,035\\+0,013\end{smallmatrix}\right)$

(1) 1500, 1000 and 750 RPM motors

(2) 3000 RPM motors

(3) These motors cannot have suspension archs, but are held by the sides of the terminal box. The figure given refers to the upper part of the terminal box.

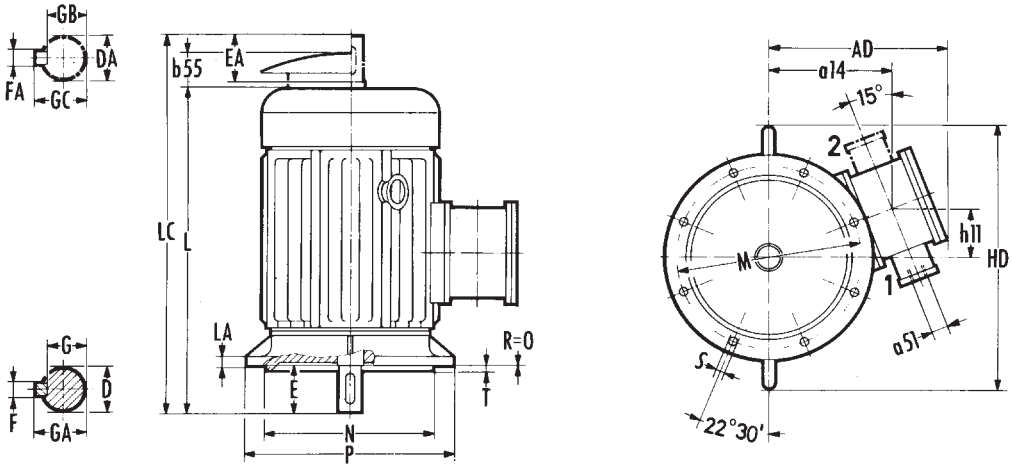

FLANGE-MOUNTED MOTORS - IM 3001 Layout

MOTOR TYPE	DIMENSIONS (mm)																									
	FLANGE DIMENSIONS							MAIN DIMENSIONS								SHAFT EXTENSIONS										
	IEC	M	N	P	LA	T	S	AD	a14	b55	HD	h11	L	LC	a51	D *	DA *	E	EA	F	FA	G	GB	GA	GC
BFGC3 315 MA (1)	F 600	600	550	660	22	6	24	687	509	118	834	185	1238	1413	1 hole	90	70	170	140	25	20	81	62,5	95	74,5
BFGC3 315 MA (2)	F 600	600	550	660	22	6	24	687	509	118	834	185	1208	1353	M63×1,5	70	70	140	140	20	20	62,5	62,5	74,5	74,5
BFGC3 355 MA (1)	F 740	740	680	800	25	6	24	732	541	125	928	196	1466	1641		95	95	170	170	25	25	86	86	100	100
BFGC3 355 MA (2)	F 740	740	680	800	25	6	24	732	541	125	928	196	1436	1581	2 holes	70	70	140	140	20	20	62,5	62,5	74,5	74,5
BFGC3 400 LA (1)	F 940	940	880	1000	28	6	28	777	586	132	1010	226	1743	1958	M63×1,5	110	110	210	210	28	28	100	100	116	116
BFGC3 400 LA (2)	F 940	940	880	1000	28	6	28	777	586	132	1010	226	1673	1818		70	70	140	140	20	20	62,5	62,5	74,5	74,5

* ISO tolerances: 65, 70 and 80 m 6 $\left(\begin{smallmatrix}+0,030\\+0,011\end{smallmatrix}\right)$; 90 and 110 m 6 $\left(\begin{smallmatrix}+0,035\\+0,013\end{smallmatrix}\right)$

Note: In **BFGC3** 355 and 400 motors, the power cable input is alongside the shaft end.

(1) 1500, 1000 and 750 RPM motors

(2) 3000 RPM motors

TWO SPEED MOTOR (FOR GENERAL APPLICATION) METRIC IEC STANDARD

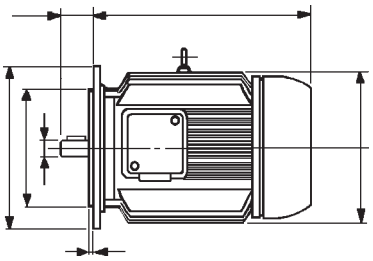

60Hz* 3600/1800 RPM 2/4 Pole
250-280 or 440-480V

50Hz* 3000/1500 RPM 2/4 Pole
220-240V or 380-415V

Part Number	Type Mount	kW	HP	Weight kg
BF5 71M424	FOOT	0.37/0.25	0.5/0.34	5.8
BF5 71M424	FOOT	0.45/0.3	0.6/0.4	5.8
BF5 71M424	FLANGE	0.37/0.25	0.5/0.34	5.8
BF5 71M424	FLANGE	0.45/0.3	0.6/0.4	5.8
BF5 80M424	FOOT	0.6/0.45	0.8/0.6	7.6
BF5 80M624	FOOT	0.85/0.65	1.1/0.9	9
BF5 80M424	FLANGE	0.6/0.45	0.8/0.6	7.6
BF5 80M624	FLANGE	0.85/0.65	1.1/0.9	9
BF5 90S224	FOOT	1.3/1	1.7/1.4	11.5
BF5 90L624	FOOT	2/1.6	2.7/2.1	13.4
BF5 90S224	FLANGE	1.3/1	1.7/1.4	11.5
BF5 90L624	FLANGE	2/1.6	2.7/2.1	13.4
BF5 100L224	FOOT	2.7/2.2	3.6/3	18
BF5 100L424	FOOT	3.4/2.7	4.5/3.6	20.5
BF5 100L224	FLANGE	2.7/2.2	3.6/3	18
BF5 100L424	FLANGE	3.4/2.7	4.5/3.6	20.5
BF5 112M424	FOOT	4.5/3.3	6/4.5	25
BF5 112M424	FLANGE	4.5/3.3	6/4.5	25
BF5 132S424	FOOT	5.7/4.6	7.6/6.1	35
BF5 132M824	FOOT	7.6/6.3	10.1/8.4	45
BF5 132S424	FLANGE	5.7/4.6	7.6/6.1	35
BF5 132M824	FLANGE	7.6/6.3	10.1/8.4	45
BF5 160M424	FOOT	12.5/8.5	17/11.5	69
BF5 160L624	FOOT	15/11	20/15	81
BF5 160M424	FLANGE	12.5/8.5	17/11.5	69
BF5 160L624	FLANGE	15/11	20/15	81

Part Number	Type Mount	kW	HP	Weight kg
BF5 180M424	FOOT	18.5/12.5	25/17	113
BF5 180L624	FOOT	22/15	30/20	125
BF5 180M424	FLANGE	18.5/12.5	25/17	113
BF5 180L624	FLANGE	22/15	30/20	125
BF5 200L824	FOOT	30/20	40/27	175
BF5 200L824	FLANGE	30/20	40/27	175
BF5 225M424	FOOT	33/22	45/30	210
BF5 225M424	FLANGE	33/22	45/30	210
BF4 250M424	FOOT	45/30	60/40	445
BF4 250M424	FLANGE	45/30	60/40	445
BF4 280SA424	FOOT	55/37	75/50	525
BF4 280MA624	FOOT	75/45	100/60	580
BF4 280SA424	FLANGE	55/37	75/50	525
BF4 280MA624	FLANGE	75/45	100/60	580
BF4 315SA424	FOOT	92/55	125/75	734
BF4 315MA624	FOOT	110/66	150/90	814
BF4 315SA424	FLANGE	92/55	125/75	734
BF4 315MA624	FLANGE	110/66	150/90	814

* All Ametric® Motors are designed to operate domestically at 60Hz and for export at 50Hz (with a corresponding change in voltage and RPMs) and are available with either foot or flange mountings. For outputs lower than 3 kw △ terminals = 220-240V/250-280V 50/60Hz & Y terminals = 380-415V/440-480V 50/60Hz. For outputs greater than 3 kw only △ terminals available at 380-415V/440-480V 50/60Hz . (voltage variation -5% +6%)

TWO SPEED MOTOR (FOR GENERAL APPLICATION) METRIC IEC STANDARD

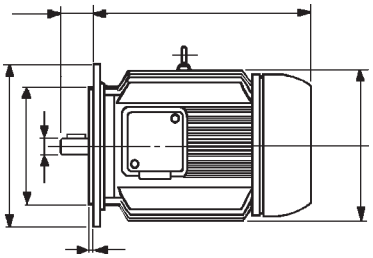

60Hz* 1800/900 RPM 4/8 Pole
250-280 or 440-480V

50Hz* 1500/750 RPM 4/8 Pole
220-240V or 380-415V

Part Number	Type Mount	kW	HP	Weight kg
BF5 71M448	FOOT	0.22/0.12	0.3/0.16	5.8
BF5 71M448	FLANGE	0.22/0.12	0.3/0.16	5.8
BF5 80M448	FOOT	0.4/0.2	0.5/0.26	9
BF5 80M448	FOOT	0.6/0.28	0.8/0.37	9
BF5 80M448	FLANGE	0.4/0.2	0.5/0.26	9
BF5 80M448	FLANGE	0.6/0.28	0.8/0.37	9
BF5 90S248	FOOT	0.7/0.37	0.9/0.5	11.5
BF5 90L248	FOOT	1.1/0.75	1.5/1	15
BF5 90S248	FLANGE	0.7/0.37	0.9/0.5	11.5
BF5 90L248	FLANGE	1.1/0.75	1.5/1	15
BF5 100L248	FOOT	1.5/0.75	2/1	18
BF5 100L448	FOOT	2.2/1	3/1.4	20.5
BF5 100L248	FLANGE	1.5/0.75	2/1	18
BF5 100L448	FLANGE	2.2/1	3/1.4	20.5
BF5 112M448	FOOT	2.7/1.5	3.6/2	25
BF5 112M448	FOOT	3.3/1.7	4.5/2.3	25
BF5 112M448	FLANGE	2.7/1.5	3.6/2	25
BF5 112M448	FLANGE	3.3/1.7	4.5/2.3	25
BF5 132M848	FOOT	4/2	5.5/2.7	47
BF5 132M848	FOOT	5.2/2.8	6.9/3.7	47
BF5 132M848	FOOT	5.7/3.4	7.6/4.5	47
BF5 132M848	FLANGE	4/2	5.5/2.7	47
BF5 132M848	FLANGE	5.2/2.8	6.9/3.7	47
BF5 132M848	FLANGE	5.7/3.4	7.6/4.5	47
BF5 160M648	FOOT	8/4.5	11/6	68
BF5 160L648	FOOT	12/7	16/9.5	81
BF5 160M648	FLANGE	8/4.5	11/6	68
BF5 160L648	FLANGE	12/7	16/9.5	81

Part Number	Type Mount	kW	HP	Weight kg
BF5 180M448	FOOT	15/9.5	20/13	115
BF5 180M448	FLANGE	15/9.5	20/13	115
BF5 200L448	FOOT	20/11	27/15	140
BF5 200L448	FLANGE	20/11	27/15	140
BF5 225S248	FOOT	24/18	33/24	170
BF5 225M448	FOOT	30/22	40/30	180
BF5 225S248	FLANGE	24/18	33/24	170
BF5 225M448	FLANGE	30/22	40/30	180
BF4 250M448	FOOT	37/26	50/35	445
BF4 250M448	FLANGE	37/26	50/35	445
BF4 280SA448	FOOT	45/30	60/40	480
BF4 280MA648	FOOT	55/37	75/50	555
BF4 280MA848	FOOT	66/45	90/60	594
BF4 280SA448	FLANGE	45/30	60/40	480
BF4 280SA648	FLANGE	55/37	75/50	555
BF4 280MA848	FLANGE	66/45	90/60	594
BF4 315SA648	FOOT	81/55	110/75	705
BF4 315MA648	FOOT	93/66	126/90	780
BF4 315MA848	FOOT	110/81	150/110	820
BF4 315SA648	FLANGE	81/55	110/75	705
BF4 315MA648	FLANGE	93/66	126/90	780
BF4 315MA848	FLANGE	110/81	150/110	820

* All Ametric® Motors are designed to operate domestically at 60Hz and for export at 50Hz (with a corresponding change in voltage and RPMs) and are available with either foot or flange mountings. For outputs lower than 3 kw △ terminals = 220-240V/250-280V 50/60Hz & Y terminals = 380-415V/440-480V 50/60Hz. For outputs greater than 3 kw only △ terminals available at 380-415V/440-480V 50/60Hz . (voltage variation -5% +6%)

TWO SPEED MOTOR (FOR GENERAL APPLICATION) METRIC IEC STANDARD

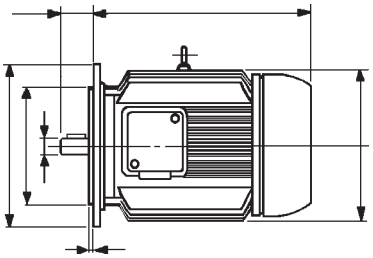

60Hz* 1800/1200 RPM 4/6 Pole
250-280 or 440-480V

50Hz* 1500/1000 RPM 4/6 Pole
220-240V or 380-415V

Part Number	Type Mount	kW	HP	Weight kg
BF5 71M446	FOOT	0.25/0.15	0.34/0.2	5.8
BF5 71M446	FLANGE	0.25/0.15	0.34/0.2	5.8
BF5 80M646	FOOT	0.35/0.3	0.5/0.4	9
BF5 80M646	FOOT	0.5/0.37	0.7/0.5	9
BF5 80M646	FLANGE	0.35/0.3	0.5/0.4	9
BF5 80M646	FLANGE	0.5/0.37	0.7/0.5	9
BF5 90S446	FOOT	0.8/0.45	1.1/0.6	11.5
BF5 90L646	FOOT	1.2/0.65	1.6/0.9	15
BF5 90S446	FLANGE	0.8/0.45	1.1/0.6	11.5
BF5 90L646	FLANGE	1.2/0.65	1.6/0.9	15
BF5 100L246	FOOT	1.5/0.9	2/1.2	18
BF5 100L446	FOOT	1.8/1.1	2.5/1.5	20.5
BF5 100L246	FLANGE	1.5/0.9	2/1.2	18
BF5 100L446	FLANGE	1.8/1.1	2.5/1.5	20.5
BF5 112M446	FOOT	2.4/1.85	3.2/2.5	23
BF5 112M446	FOOT	2.8/2.05	3.7/2.7	23
BF5 112M446	FLANGE	2.4/1.85	3.2/2.5	23
BF5 112M446	FLANGE	2.8/2.05	3.7/2.7	23
BF5 132M846	FOOT	3.9/2.65	5.2/3.5	47
BF5 132M846	FOOT	5.4/3.5	7.2/4.6	47
BF5 132M846	FLANGE	3.9/2.65	5.2/3.5	47
BF5 132M846	FLANGE	5.4/3.5	7.2/4.6	47
BF5 160M446	FOOT	7.5/5.5	10/7.5	69
BF5 160L646	FOOT	11.5/8.5	15.3/11.5	81
BF5 160M446	FLANGE	7.5/5.5	10/7.5	69
BF5 160L646	FLANGE	11.5/8.5	15.3/11.5	81

Part Number	Type Mount	kW	HP	Weight kg
BF5 180M446	FOOT	13/8	18/11	113
BF5 180L646	FOOT	15/10	20/14	125
BF5 180M446	FLANGE	13/8	18/11	113
BF5 180L646	FLANGE	15/10	20/14	125
BF5 200L446	FOOT	17/12	23/16	149
BF5 200L646	FOOT	23/15	31/20	149
BF5 200L446	FLANGE	17/12	23/16	149
BF5 200L646	FLANGE	23/15	31/20	149
BF5 225M446	FOOT	30/20	40/27	200
BF5 225M446	FLANGE	30/20	40/27	200
BF4 250M446	FOOT	37/22	50/30	437
BF4 250M446	FLANGE	37/22	50/30	437
BF4 280SA446	FOOT	45/26	60/35	480
BF4 280MA446	FOOT	55/30	75/40	500
BF4 280MA846	FOOT	66/44	90/60	594
BF4 280SA446	FLANGE	45/26	60/35	480
BF4 280MA446	FLANGE	55/30	75/40	500
BF4 280MA846	FLANGE	66/44	90/60	594
BF4 315SA446	FOOT	81/55	110/75	750
BF4 315MA646	FOOT	95/66	130/90	820
BF4 315SA446	FLANGE	81/55	110/75	750
BF4 315MA646	FLANGE	95/66	130/90	820

* All Ametric® Motors are designed to operate domestically at 60Hz and for export at 50Hz (with a corresponding change in voltage and RPMs) and are available with either foot or flange mountings. For outputs lower than 3 kw △ terminals = 220-240V/250-280V 50/60Hz & Y terminals = 380-415V/440-480V 50/60Hz. For outputs greater than 3 kw only △ terminals available at 380-415V/440-480V 50/60Hz . (voltage variation -5% +6%)

TWO SPEED MOTOR (FOR GENERAL APPLICATION) METRIC IEC STANDARD

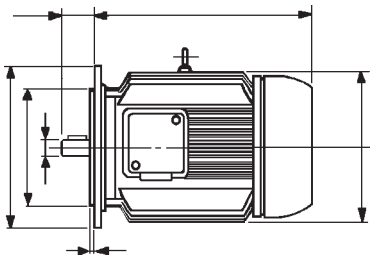

60Hz* 1200/900 RPM 6/8 Pole
250-280 or 440-480V

50Hz* 1000/750 RPM 6/8 Pole
220-240V or 380-415V

Part Number	Type Mount	kW	HP	Weight kg
BF5 71M468	FOOT	0.12/0.05	0.16/0.07	5.8
BF5 71M468	FLANGE	0.12/0.05	0.16/0.07	5.8
BF5 80M668	FOOT	0.25/0.12	0.34/0.16	9
BF5 80M668	FLANGE	0.25/0.12	0.34/0.16	9
BF5 90L668	FOOT	0.37/0.25	0.5/0.34	15
BF5 90L668	FLANGE	0.37/0.25	0.5/0.34	15
BF5 100L268	FOOT	0.55/0.37	0.75/0.5	18
BF5 100L468	FOOT	0.75/0.55	1/0.75	20.5
BF5 100L268	FLANGE	0.55/0.37	0.75/0.5	18
BF5 100L468	FLANGE	0.75/0.55	1/0.75	20.5
BF5 112M468	FOOT	1.1/0.75	1.5/1	25
BF5 112M468	FOOT	1.5/0.88	2/1.2	25
BF5 112M468	FLANGE	1.1/0.75	1.5/1	25
BF5 112M468	FLANGE	1.5/0.88	2/1.2	25
BF5 132S868	FOOT	2.65/1.95	3.5/2.6	35
BF5 132M868	FOOT	3/2.2	4/3	47
BF5 132S868	FLANGE	2.65/1.95	3.5/2.6	35
BF5 132M868	FLANGE	3/2.2	4/3	47
BF5 160M468	FOOT	4/3	5.5/4	69
BF5 160L468	FOOT	6.2/4.4	8.3/6	
BF5 160L668	FOOT	8.4/5.7	11/7.6	81
BF5 160M468	FLANGE	4/3	5.5/4	69
BF5 160L468	FLANGE	6.2/4.4	8.3/6	
BF5 160L668	FLANGE	8.4/5.7	11/7.6	81

Part Number	Type Mount	kW	HP	Weight kg
BF5 180L868	FOOT	13/9.5	18/13	115
BF5 180L868	FLANGE	13/9.5	18/13	115
BF5 200L668	FOOT	16/12	21/16	125
BF5 200L868	FOOT	22/16	30/21	140
BF5 200L668	FLANGE	16/12	21/16	125
BF5 200L868	FLANGE	22/16	30/21	140
BF5 225M468	FOOT	25/18.5	34/25	210
BF5 225M468	FLANGE	25/18.5	34/25	210
BF4 250M468	FOOT	30/22	40/30	405
BF4 250M468	FLANGE	30/22	40/30	405
BF4 280M668	FOOT	42/31	56/41	475
BF4 280M868	FOOT	55/45	75/60	490
BF4 280M668	FLANGE	42/31	56/41	475
BF4 280M868	FLANGE	55/45	75/60	490
BF4 315MA668	FOOT	70/55	93/75	790
BF4 315MA668	FLANGE	70/55	93/75	790

* All Ametric® Motors are designed to operate domestically at 60Hz and for export at 50Hz (with a corresponding change in voltage and RPMs) and are available with either foot or flange mountings. For outputs lower than 3 kw △ terminals = 220-240V/250-280V 50/60Hz & Y terminals = 380-415V/440-480V 50/60Hz. For outputs greater than 3 kw only △ terminals available at 380-415V/440-480V 50/60Hz . (voltage variation -5% +6%)

TWO SPEED MOTOR (FOR FAN APPLICATION) METRIC IEC STANDARD

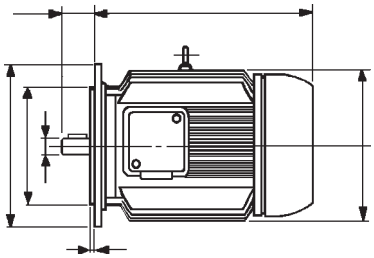

60Hz* 3600/1800 RPM 2/4 Pole
250-280 or 440-480V

50Hz* 3000/1500 RPM 2/4 Pole
220-240V or 380-415V

Part Number	Type Mount	kW	HP	Weight kg
BF5 71M424	FOOT	0.55/0.11	0.75/0.15	5.8
BF5 71M424	FLANGE	0.55/0.11	0.75/0.15	5.8
BF5 80M424	FOOT	0.9/0.18	1.2/0.25	9
BF5 80M624	FOOT	1.2/0.25	1.6/0.34	9
BF5 80M424	FLANGE	0.9/0.18	1.2/0.25	9
BF5 80M624	FLANGE	1.2/0.25	1.6/0.34	9
BF5 90S224	FOOT	1.6/0.35	2.1/0.5	12
BF5 90L424	FOOT	2.2/0.45	3/0.6	14
BF5 90S224	FLANGE	1.6/0.35	2.1/0.5	12
BF5 90L424	FLANGE	2.2/0.45	3/0.6	14
BF5 100L424	FOOT	3.5/0.7	4.6/0.9	20.5
BF5 100L424	FLANGE	3.5/0.7	4.6/0.9	20.5
BF5 112M224	FOOT	4.5/1.1	6/1.5	23
BF5 112M424	FOOT	5.5/1.35	7.5/1.8	
BF5 112M224	FLANGE	4.5/1.1	6/1.5	23
BF5 112M424	FLANGE	5.5/1.35	7.5/1.8	
BF5 132S624	FOOT	6.9/1.7	9.2/2.3	42
BF5 132S624	FOOT	8.3/2.1	11/2.8	42
BF5 132M824	FOOT	9/2.5	12/3.4	
BF5 132S624	FLANGE	6.9/1.7	9.2/2.3	42
BF5 132S624	FLANGE	8.3/2.1	11/2.8	42
BF5 132M824	FLANGE	9/2.5	12/3.4	
BF5 160M424	FOOT	15/3	20/4	70
BF5 160L624	FOOT	18/4	24/5.5	82
BF5 160M424	FLANGE	15/3	20/4	70
BF5 160L624	FLANGE	18/4	24/5.5	82

Part Number	Type Mount	kW	HP	Weight kg
BF5 180M424	FOOT	20/4	27/5.5	120
BF5 180L424	FOOT	24/4.8	33/6.5	
BF5 180M424	FLANGE	20/4	27/5.5	120
BF5 180L424	FLANGE	24/4.8	33/6.5	
BF5 200L624	FOOT	27/5.5	37/7.5	
BF5 200L824	FOOT	32/6.5	43/8.8	175
BF5 200L624	FLANGE	27/5.5	37/7.5	
BF5 200L824	FLANGE	32/6.5	43/8.8	175
BF5 225M424	FOOT	37/7	50/9.5	220
BF5 225M424	FLANGE	37/7	50/9.5	220
BF4 250M424	FOOT	45/8.8	60/12	445
BF4 250M424	FLANGE	45/8.8	60/12	445
BF4 280SA424	FOOT	55/11	75/15	525
BF4 280MA624	FOOT	75/15	100/20	580
BF4 280SA424	FLANGE	55/11	75/15	525
BF4 280MA624	FLANGE	75/15	100/20	580
BF4 315SA424	FOOT	90/18.5	122/25	734
BF4 315MA624	FOOT	110/22	150/30	814
BF4 315SA424	FLANGE	90/18.5	122/25	734
BF4 315MA624	FLANGE	110/22	150/30	814

* All Ametric® Motors are designed to operate domestically at 60Hz and for export at 50Hz (with a corresponding change in voltage and RPMs) and are available with either foot or flange mountings. For outputs lower than 3 kw △ terminals = 220-240V/250-280V 50/60Hz & Y terminals = 380-415V/440-480V 50/60Hz. For outputs greater than 3 kw only △ terminals available at 380-415V/440-480V 50/60Hz . (voltage variation -5% +6%)

TWO SPEED MOTOR (FOR FAN APPLICATION) METRIC IEC STANDARD

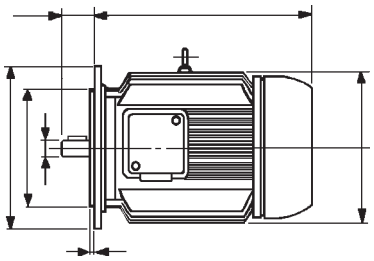

60Hz* 1800/900 RPM 4/8 Pole
250-280 or 440-480V

50Hz* 1500/750 RPM 4/8 Pole
220-240V or 380-415V

Part Number	Type Mount	kW	HP	Weight kg
BF5 71M448	FOOT	0.4/0.1	0.5/0.13	5.8
BF5 71M448	FLANGE	0.4/0.1	0.5/0.13	5.8
BF5 80M448	FOOT	0.65/0.13	0.9/0.17	
BF5 80M648	FOOT	0.85/0.18	1.1/0.25	9
BF5 80M448	FLANGE	0.65/0.13	0.9/0.17	
BF5 80M648	FLANGE	0.85/0.18	1.1/0.25	9
BF5 90S448	FOOT	1.2/0.28	1.6/0.37	
BF5 90L648	FOOT	1.7/0.35	2.3/0.5	15
BF5 90S448	FLANGE	1.2/0.28	1.6/0.37	
BF5 90L648	FLANGE	1.7/0.35	2.3/0.5	15
BF5 100L248	FOOT	2.3/0.5	3/0.7	18
BF5 100L448	FOOT	2.8/0.6	3.7/0.8	21
BF5 100L248	FLANGE	2.3/0.5	3/0.7	18
BF5 100L448	FLANGE	2.8/0.6	3.7/0.8	21
BF5 112M448	FOOT	3.7/0.92	5/1.2	25
BF5 112M448	FLANGE	3.7/0.92	5/1.2	25
BF5 132S848	FOOT	5.2/1.35	6.9/1.8	
BF5 132M848	FOOT	6.3/1.7	8.4/2.3	45
BF5 132M848	FOOT	8.4/2.05	11/2.7	45
BF5 132S848	FLANGE	5.2/1.35	6.9/1.8	
BF5 132M848	FLANGE	6.3/1.7	8.4/2.3	45
BF5 132M848	FLANGE	8.4/2.05	11/2.7	45
BF5 160M448	FOOT	10.5/2.2	14/3	69
BF5 160L648	FOOT	15.5/2.7	20/3.6	81
BF5 160M448	FLANGE	10.5/2.2	14/3	69
BF5 160L648	FLANGE	15.5/2.7	20/3.6	81

Part Number	Type Mount	kW	HP	Weight kg
BF5 180M448	FOOT	17/3.4	23/4.5	113
BF5 180L648	FOOT	20/4	27/5.5	125
BF5 180M448	FLANGE	17/3.4	23/4.5	113
BF5 180L648	FLANGE	20/4	27/5.5	125
BF5 200L448	FOOT	26/5	35/6.8	
BF5 200L448	FLANGE	26/5	35/6.8	
BF5 225S248	FOOT	36/7	48/9.5	200
BF5 225M448	FOOT	42/8.5	56/11.5	210
BF5 225S248	FLANGE	36/7	48/9.5	200
BF5 225M448	FLANGE	42/8.5	56/11.5	210
BF4 250M448	FOOT	40/8.8	55/12	440
BF4 250M448	FLANGE	40/8.8	55/12	440
BF4 280SA448	FOOT	47/11	64/15	480
BF4 280MA648	FOOT	58/15	79/20	545
BF4 280MA848	FOOT	68/18.5	92/25	595
BF4 280SA448	FLANGE	47/11	64/15	480
BF4 280SA648	FLANGE	58/15	79/20	545
BF4 280MA848	FLANGE	68/18.5	92/25	595
BF4 315SA448	FOOT	85/22	116/30	680
BF4 315MA648	FOOT	97/25	132/34	775
BF4 315MA848	FOOT	115/30	156/40	820
BF4 315SA448	FLANGE	85/22	116/30	680
BF4 315MA648	FLANGE	97/25	132/34	775
BF4 315MA848	FLANGE	115/30	156/40	820

* All Ametric® Motors are designed to operate domestically at 60Hz and for export at 50Hz (with a corresponding change in voltage and RPMs) and are available with either foot or flange mountings. For outputs lower than 3 kw △ terminals = 220-240V/250-280V 50/60Hz & Y terminals = 380-415V/440-480V 50/60Hz. For outputs greater than 3 kw only △ terminals available at 380-415V/440-480V 50/60Hz . (voltage variation -5% +6%)

TWO SPEED MOTOR (FOR FAN APPLICATION) METRIC IEC STANDARD

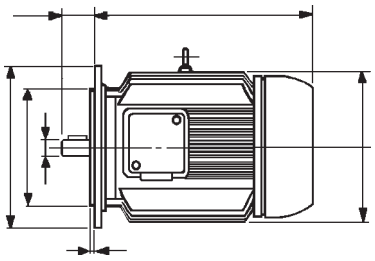

60Hz* 1800/1200 RPM 4/6 Pole
250-280 or 440-480V

50Hz* 1500/1000 RPM 4/6 Pole
220-240V or 380-415V

Part Number	Type Mount	kW	HP	Weight kg
BF5 71M446	FOOT	0.3/0.1	0.4/0.13	5.8
BF5 71M446	FLANGE	0.3/0.1	0.4/0.13	5.8
BF5 80M646	FOOT	0.5/0.15	0.7/0.2	9
BF5 80M646	FOOT	0.65/0.22	0.9/0.3	9
BF5 80M646	FLANGE	0.5/0.15	0.7/0.2	9
BF5 80M646	FLANGE	0.65/0.22	0.9/0.3	9
BF5 90S446	FOOT	1.1/0.32	1.5/0.4	
BF5 90L646	FOOT	1.6/0.5	2.1/0.7	15
BF5 90S446	FLANGE	1.1/0.32	1.5/0.4	
BF5 90L646	FLANGE	1.6/0.5	2.1/0.7	15
BF5 100L246	FOOT	2/0.6	2.7/0.8	18
BF5 100L446	FOOT	2.4/0.75	3.2/1	20.5
BF5 100L246	FLANGE	2/0.6	2.7/0.8	18
BF5 100L446	FLANGE	2.4/0.75	3.2/1	20.5
BF5 112M446	FOOT	3.45/1.1	4.6/1.5	25
BF5 112M446	FLANGE	3.45/1.1	4.6/1.5	25
BF5 132S846	FOOT	4.6/1.35	6.1/1.8	
BF5 132M846	FOOT	6.2/1.8	8.3/2.5	45
BF5 132M846	FOOT	7.2/2.1	9.6/2.8	45
BF5 132S846	FLANGE	4.6/1.35	6.1/1.8	
BF5 132M846	FLANGE	6.2/1.8	8.3/2.5	45
BF5 132M846	FLANGE	7.2/2.1	9.6/2.8	45
BF5 160M646	FOOT	10/3.3	14/4.5	
BF5 160L646	FOOT	14.5/4.5	19/6	81
BF5 160M646	FLANGE	10/3.3	14/4.5	
BF5 160L646	FLANGE	14.5/4.5	19/6	81

Part Number	Type Mount	kW	HP	Weight kg
BF5 180M446	FOOT	16/5	21/6.8	113
BF5 180L446	FOOT	20/6.5	27/8.8	
BF5 180M446	FLANGE	16/5	21/6.8	113
BF5 180L446	FLANGE	20/6.5	27/8.8	
BF5 200L446	FOOT	22.7/7.5	30/10	
BF5 200L646	FOOT	27/9	37/12	149
BF5 200L446	FLANGE	22.7/7.5	30/10	
BF5 200L646	FLANGE	27/9	37/12	149
BF5 225M246	FOOT	34/12	45/16	
BF5 225M246	FLANGE	34/12	45/16	
BF4 250M446	FOOT	42/15	56/20	445
BF4 250M446	FLANGE	42/15	56/20	445
BF4 280SA446	FOOT	50/18.5	67/25	510
BF4 280MA846	FOOT	66/22	90/30	595
BF4 280SA446	FLANGE	50/18.5	67/25	510
BF4 280MA846	FLANGE	66/22	90/30	595
BF4 315SA446	FOOT	80/30	110/40	750
BF4 315MA646	FOOT	95/37	130/50	820
BF4 315SA446	FLANGE	80/30	110/40	750
BF4 315MA646	FLANGE	95/37	130/50	820

* All Ametric® Motors are designed to operate domestically at 60Hz and for export at 50Hz (with a corresponding change in voltage and RPMs) and are available with either foot or flange mountings. For outputs lower than 3 kw △ terminals = 220-240V/250-280V 50/60Hz & Y terminals = 380-415V/440-480V 50/60Hz. For outputs greater than 3 kw only △ terminals available at 380-415V/440-480V 50/60Hz . (voltage variation -5% +6%)

TWO SPEED MOTOR (FOR FAN APPLICATION) METRIC IEC STANDARD

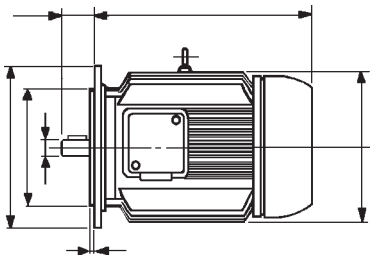

60Hz* 1200/900 RPM 6/8 Pole
250-280 or 440-480V

50Hz* 1000/750 RPM 6/8 Pole
220-240V or 380-415V

Part Number	Type Mount	kW	HP	Weight kg
BF5 71M468	FOOT	0.12/0.05	0.16/0.07	5.8
BF5 71M468	FLANGE	0.12/0.05	0.16/0.07	5.8
BF5 80M668	FOOT	0.25/0.08	0.34/0.1	9
BF5 80M668	FOOT	0.3/0.1	0.4/0.13	9
BF5 80M668	FLANGE	0.25/0.08	0.34/0.1	9
BF5 80M668	FLANGE	0.3/0.1	0.4/0.13	9
BF5 90S468	FOOT	0.45/0.18	0.6/0.25	
BF5 90L668	FOOT	0.6/0.24	0.8/0.33	15
BF5 90S468	FLANGE	0.45/0.18	0.6/0.25	
BF5 90L668	FLANGE	0.6/0.24	0.8/0.33	15
BF5 100L268	FOOT	1.1/0.5	1.5/0.7	18
BF5 100L468	FOOT	1.4/0.6	1.9/0.8	20.5
BF5 100L268	FLANGE	1.1/0.5	1.5/0.7	18
BF5 100L468	FLANGE	1.4/0.6	1.9/0.8	20.5
BF5 112M468	FOOT	1.8/0.75	2.5/1	25
BF5 112M468	FLANGE	1.8/0.75	2.5/1	25
BF5 132S868	FOOT	2.5/1.1	3.4/1.5	
BF5 132M868	FOOT	3.3/1.4	4.5/1.9	47
BF5 132S868	FLANGE	2.5/1.1	3.4/1.5	
BF5 132M868	FLANGE	3.3/1.4	4.5/1.9	47
BF5 160M468	FOOT	4/2	5.5/2.7	69
BF5 160M468	FOOT	5/2.5	6.8/3.4	69
BF5 160L668	FOOT	7.1/3	9.5/4	81
BF5 160M468	FLANGE	4/2	5.5/2.7	69
BF5 160M468	FLANGE	5/2.5	6.8/3.4	69
BF5 160L668	FLANGE	7.1/3	9.5/4	81

Part Number	Type Mount	kW	HP	Weight kg
BF5 180L468	FOOT	10/5	14/6.8	115
BF5 180L668	FOOT	14/6.2	19/8.3	
BF5 180L468	FLANGE	10/5	14/6.8	115
BF5 180L668	FLANGE	14/6.2	19/8.3	
BF5 200L668	FOOT	17/8	23/11	
BF5 200L868	FOOT	24/11.5	33/15.3	
BF5 200L668	FLANGE	17/8	23/11	
BF5 200L868	FLANGE	24/11.5	33/15.3	
BF5 225M468	FOOT	28/13	37/18	205
BF5 225M468	FLANGE	28/13	37/18	205
BF4 250M468	FOOT	33/17	45/23	405
BF4 250M468	FLANGE	33/17	45/23	405
BF4 280SA468	FOOT	37/18.5	50/25	470
BF4 280MA668	FOOT	45/22	60/30	
BF4 280MA868	FOOT	58/27	79/37	
BF4 280SA468	FLANGE	37/18.5	50/25	470
BF4 280MA668	FLANGE	45/22	60/30	
BF4 280MA868	FLANGE	58/27	79/37	
BF4 315SA668	FOOT	75/33	100/45	
BF4 315MA668	FOOT	82/36	109/48	790
BF4 315SA668	FLANGE	75/33	100/45	
BF4 315MA668	FLANGE	82/36	109/48	790

* All Ametric® Motors are designed to operate domestically at 60Hz and for export at 50Hz (with a corresponding change in voltage and RPMs) and are available with either foot or flange mountings. For outputs lower than 3 kw △ terminals = 220-240V/250-280V 50/60Hz & Y terminals = 380-415V/440-480V 50/60Hz. For outputs greater than 3 kw only △ terminals available at 380-415V/440-480V 50/60Hz . (voltage variation -5% +6%)

SINGLE PHASE TEFC CAPACITOR RUN METRIC IEC STANDARD

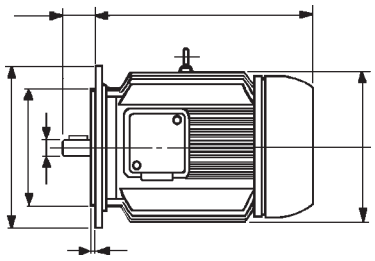

60Hz 3600RPM 2 Pole 115V or 230V

50Hz 3000RPM 2 Pole 110V or 220V

Part Number	Type Mount	kW	HP	Weight kg
BF5C 71M42	FOOT	0.18	0.24	5.9
BF5C 71M42	FOOT	0.25	0.34	5.9
BF5C 71M42	FOOT	0.37	0.50	5.9
BF5C 71M62	FOOT	0.55	0.74	6.3
BF5C 71M42	FLANGE	0.18	0.24	5.9
BF5C 71M42	FLANGE	0.25	0.34	5.9
BF5C 71M42	FLANGE	0.37	0.50	5.9
BF5C 71M62	FLANGE	0.55	0.74	6.3
BF5C 80M42	FOOT	0.75	1.01	9.2
BF5C 80M42	FLANGE	0.75	1.01	9.2
BF5C 90S22	FOOT	1.1	1.47	12.3
BF5C 90L42	FOOT	1.5	2.01	14.0
BF5C 90S22	FLANGE	1.1	1.47	12.3
BF5C 90L42	FLANGE	1.5	2.01	14.0
BF5C 100L42	FOOT	2.2	2.95	20.5
BF5C 100L42	FLANGE	2.2	2.95	20.5
BF5C 112M42	FOOT	3	4.02	17.5
BF5C 112M42	FLANGE	3	4.02	17.5

60Hz 1800RPM 4 Pole 115V or 230V

50Hz 1500RPM 4 Pole 110V or 220V

Part Number	Type Mount	kW	HP	Weight kg
BF5C 71M44	FOOT	0.18	0.24	6.0
BF5C 71M44	FOOT	0.25	0.34	6.0
BF5C 71M44	FOOT	0.37	0.50	6.0
BF5C 71M44	FLANGE	0.18	0.24	6.0
BF5C 71M44	FLANGE	0.25	0.34	6.0
BF5C 71M44	FLANGE	0.37	0.50	6.0
BF5C 80M44	FOOT	0.55	0.74	8.6
BF5C 80M64	FOOT	0.75	1.01	9.4
BF5C 80M44	FLANGE	0.55	0.74	8.6
BF5C 80M64	FLANGE	0.75	1.01	9.4
BF5C 90L44	FOOT	1.1	1.47	13.6
BF5C 90L64	FOOT	1.5	2.01	15.3
BF5C 90L44	FLANGE	1.1	1.47	13.6
BF5C 90L64	FLANGE	1.5	2.01	15.3
BF5C 100L44	FOOT	2.2	2.95	21.5
BF5C 100L44	FLANGE	2.2	2.95	21.5
BF5C 112M44	FOOT	3	4.02	25.5
BF5C 112M44	FLANGE	3	4.02	25.5

60Hz 1200RPM 6 Pole 115V or 230V

50Hz 1000RPM 6 Pole 110V or 220V

Part Number	Type Mount	kW	HP	Weight kg
BF5C 71M46	FOOT	0.12	0.16	6.0
BF5C 71M46	FLANGE	0.12	0.16	6.0
BF5C 80M46	FOOT	0.18	0.24	8.5
BF5C 80M66	FOOT	0.25	0.34	9.2
BF5C 80M66	FOOT	0.37	0.50	9.2
BF5C 80M46	FLANGE	0.18	0.24	8.5
BF5C 80M66	FLANGE	0.25	0.34	9.2
BF5C 80M66	FLANGE	0.37	0.50	9.2

Part Number	Type Mount	kW	HP	Weight kg
BF5C 90L66	FOOT	0.55	0.74	15.0
BF5C 90L66	FLANGE	0.55	0.74	15.0
BF5C 100L46	FOOT	0.75	1.01	20.5
BF5C 100L46	FLANGE	0.75	1.01	20.5
BF5C 112M46	FOOT	1.1	1.47	25.5
BF5C 112M46	FLANGE	1.1	1.47	25.5

SINGLE PHASE TEFC CAPACITOR START/RUN METRIC IEC STANDARD

60Hz 3600RPM 2 Pole 115V or 230V

50Hz 3000RPM 2 Pole 110V or 220V

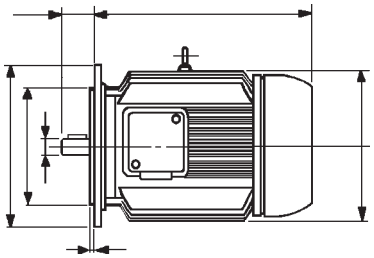

60Hz 1800RPM 4 Pole 115V or 230V

50Hz 1500RPM 4 Pole 110V or 220V

Part Number	Type Mount	kW	HP	Weight kg
BF5D 71M42	P	0.37	0.50	5.9
BF5D 71M62	P	0.55	0.74	6.3
BF5D 71M42	G	0.37	0.50	5.9
BF5D 71M62	G	0.55	0.74	6.3
BF5D 80M42	P	0.75	1.01	9.8
BF5D 80M42	P	1.1	1.47	9.8
BF5D 80M42	G	0.75	1.01	9.8
BF5D 80M42	G	1.1	1.47	9.8
BF5D 90L42	P	1.5	2.01	15.5
BF5D 90L62	P	2.2	2.95	15.5
BF5D 90L42	G	1.5	2.01	15.5
BF5D 90L62	G	2.2	2.95	15.5
BF5D 100L42	P	3	4.02	22.0
BF5D 100L42	G	3	4.02	22.0

Part Number	Type Mount	kW	HP	Weight kg
BF5D 71M44	P	0.25	0.34	5.9
BF5D 71M44	P	0.37	0.50	5.9
BF5D 71M44	G	0.25	0.34	5.9
BF5D 71M44	G	0.37	0.50	5.9
BF5D 80M44	P	0.55	0.74	10.0
BF5D 80M64	P	0.75	1.01	10.0
BF5D 80M44	G	0.55	0.74	10.0
BF5D 80M64	G	0.75	1.01	10.0
BF5D 90L44	P	1.1	1.47	16.5
BF5D 90L64	P	1.5	2.01	16.5
BF5D 90L44	G	1.1	1.47	16.5
BF5D 90L64	G	1.5	2.01	16.5
BF5D 100L44	P	2.2	2.95	23.0
BF5D 100L44	G	2.2	2.95	23.0

SINGLE PHASE TEFC CAPACITOR START METRIC IEC STANDARD

60Hz 3600RPM 2 Pole 115V or 230V

50Hz 3000RPM 2 Pole 110V or 220V

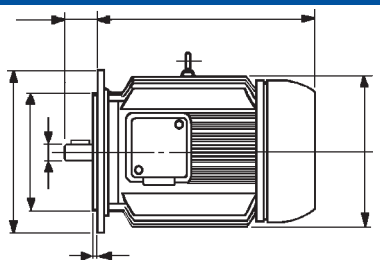

60Hz 1800RPM 4 Pole 115V or 230V

50Hz 1500RPM 4 Pole 110V or 220V

Part Number	Type Mount	kW	HP	Weight kg
BF5M 71M42	FOOT	0.18	0.24	5.9
BF5M 71M42	FOOT	0.25	0.34	5.9
BF5M 71M62	FOOT	0.37	0.50	6.3
BF5M 71M42	FLANGE	0.18	0.24	5.9
BF5M 71M42	FLANGE	0.25	0.34	5.9
BF5M 71M62	FLANGE	0.37	0.50	6.3
BF5M 80M42	FOOT	0.55	0.74	9.8
BF5M 80M42	FLANGE	0.55	0.74	9.8
BF5M 90S22	FOOT	0.75	1.01	12.5
BF5M 90L42	FOOT	1.1	1.47	14.5
BF5M 90L62	FOOT	1.5	2.01	15.5
BF5M 90S22	FLANGE	0.75	1.01	12.5
BF5M 90L42	FLANGE	1.1	1.47	14.5
BF5M 90L62	FLANGE	1.5	2.01	15.5
BF5M 100L42	FOOT	2.2	2.95	21.0
BF5M 100L42	FLANGE	2.2	2.95	21.0

Part Number	Type Mount	kW	HP	Weight kg
BF5M 71M44	FOOT	0.18	0.24	6.0
BF5M 71M44	FOOT	0.25	0.34	6.0
BF5M 71M44	FLANGE	0.18	0.24	6.0
BF5M 71M44	FLANGE	0.25	0.34	6.0
BF5M 80M44	FOOT	0.37	0.50	9.0
BF5M 80M44	FLANGE	0.37	0.50	9.0
BF5M 90S24	FOOT	0.55	0.74	12.2
BF5M 90L64	FOOT	0.75	1.01	15.5
BF5M 90S24	FLANGE	0.55	0.74	12.2
BF5M 90L64	FLANGE	0.75	1.01	15.5
BF5M 100L44	FOOT	1.1	1.47	22.0
BF5M 100L44	FOOT	1.5	2.01	22.0
BF5M 100L44	FLANGE	1.1	1.47	22.0
BF5M 100L44	FLANGE	1.5	2.01	22.0

DIMENSIONS

FOOT MOUNTED MOTORS

IM 1001; 1002; 1051; 1052; 1061; 1062; 1071; 1072; 1011; 1012; 1031; 1032

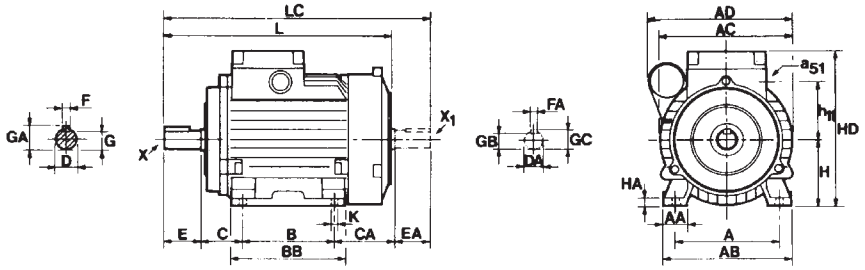

MOTOR TYPE	A	AA	AB	AC	AD	B	BB	C	CA	H	HA	HD	h11	K	L	LC	a51 hole Ø	a51 cable gland	D*	DA*	E	EA	F	FA	G	GA	GB	GC	X	X1
	DIMENSIONS (mm)																		SHAFT EXTENSIONS											
BF5C 71M	112	25	132	140	165	90	110	45	65	71	8	177	63	7	227	260	22.5	TA16	14	14	30	30	5	5	11	16	11	16	M4 x 10	M4 x 10
BF5C 80M	125	27.5	150	157	175	100	120	50	78	80	9.5	192.5	68.5	10	265	298	22.5	TA16	19	14	40	30	6	5	15.5	21.5	11	16	M6 x 16	M4 x 10
BF5C 90S	140	30	171	180	220	100	127	56	80	90	10	210	78.5	10	283	326	22.5	TA16	24	19	50	40	8	6	20	27	15.5	21.5	M8 x 19	M6 x 16
BF5C 90L	140	30	171	180	220	125	152	56	80	90	10	210	78.5	10	308	351	22.5	TA16	24	19	50	40	8	6	20	27	15.5	21.5	M8 x 19	M6 x 16
BF5C 100L	160	35	195	200	230	140	175	63	91	100	12	235.5	90.5	12	350	404	28.5	TA21	28	24	60	50	8	8	24	31	20	27	M10 x 22	M8 x 19
BF5C 112M	190	40	220	211	236	140	175	70	117	112	12	257.5	88	12	383	437	28.5	TA21	28	24	60	50	8	8	24	31	20	27	M10 x 22	M8 x 19

* Tolerances ISO: 14 j6 $\begin{pmatrix} +0.008 \\ -0.003 \end{pmatrix}$; 19,24 and 28 j6 $\begin{pmatrix} +0.009 \\ -0.004 \end{pmatrix}$

FLANGE MOUNTED MOTORS

FREE-GOING FIXING HOLES
IM 3001; 3002; 3011; 3012; 3031; 3032

THREADED FIXING HOLES
IM 3601; 3602; 3611; 3612; 3631; 3632

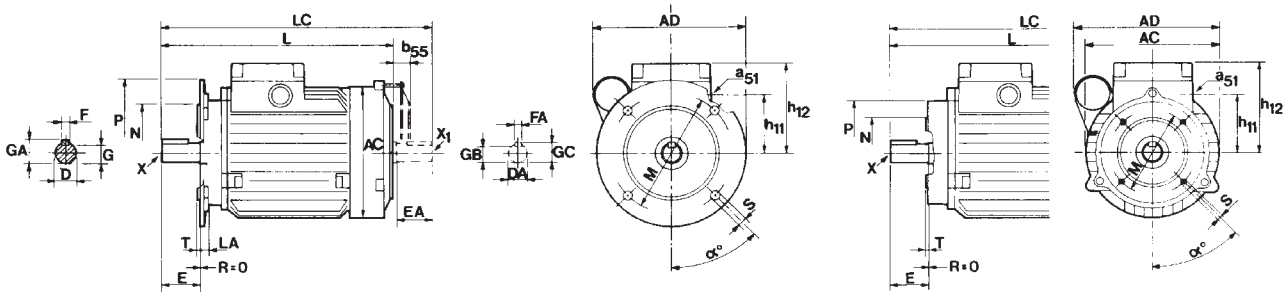

MOTOR TYPE	Form IM	IEC	M	N	P	LA	T	α	S	AC	AD	h11	h12	L	LC	b55	a51 hole Ø	a51 cable gland	D*	DA*	E	EA	F	FA	G	GA	GB	GC	X	X1
	FLANGE DIMENSIONS									MAIN DIMENSIONS									SHAFT EXTENSIONS											
BF5C 71M	30--	F130	130	110	160	8	3.5	45°	10	140	175	63	106	227	260	19.5	22.5	TA16	14	14	30	30	5	5	11	16	11	16	M4 x 10	M4 x 10
	36--	F85	85	70	105	–	2.5	45°	M6	140	165	63	106	227	260	19.5	22.5	TA16	14	14	30	30	5	5	11	16	11	16	M4 x 10	M4 x 10
BF5C 80M	30--	F165	165	130	200	8	3.5	45°	12	157	197	68.5	113	265	298	23	22.5	TA16	19	14	40	30	6	5	15.5	21.5	11	16	M6 x 16	M4 x 10
	36--	F100	100	80	120	–	3	45°	M6	157	175	68.5	113	265	298	23	22.5	TA16	19	14	40	30	6	5	15.5	21.5	11	16	M6 x 16	M4 x 10
BF5C 90S	30--	F165	165	130	200	10	3.5	45°	12	180	230	78.5	120	283	326	23	22.5	TA16	24	19	50	40	8	6	20	27	15.5	21.5	M8 x 19	M6 x 16
	36--	F115	115	95	140	–	3	45°	M8	180	220	78.5	120	283	326	23	22.5	TA16	24	19	50	40	8	6	20	27	15.5	21.5	M8 x 19	M6 x 16
BF5C 90L	30--	F165	165	130	200	10	3.5	45°	12	180	230	78.5	120	308	351	23	22.5	TA16	24	19	50	40	8	6	20	27	15.5	21.5	M8 x 19	M6 x 16
	36--	F115	115	95	140	–	3	45°	M8	180	220	78.5	120	308	351	23	22.5	TA16	24	19	50	40	8	6	20	27	15.5	21.5	M8 x 19	M6 x 16
BF5C 100L	30--	F215	215	180	250	12	4	45°	15	200	255	90.5	136	350	404	23	28.5	TA21	28	24	60	50	8	8	24	31	20	27	M10 x 22	M8 x 19
	36--	F130	130	110	160	–	3.5	45°	M8	200	230	90.5	136	350	404	23	28.5	TA21	28	24	60	50	8	8	24	31	20	27	M10 x 22	M8 x 19
BF5C 112M	30--	F215	215	180	250	12	4	45°	15	211	255	88	146	383	437	30	28.5	TA21	28	24	60	50	8	8	24	31	20	27	M10 x 22	M8 x 19
	36--	F130	130	110	160	–	3.5	45°	M8	211	236	88	146	383	437	30	28.5	TA21	28	24	60	50	8	8	24	31	20	27	M10 x 22	M8 x 19

* Tolerances ISO: 14 j6 $\begin{pmatrix} +0.008 \\ -0.003 \end{pmatrix}$; 19,24 and 28 j6 $\begin{pmatrix} +0.009 \\ -0.004 \end{pmatrix}$

SUBJECT TO MODIFICATION WITHOUT WARNING

DIMENSIONS

FOOT MOUNTED MOTORS
IM 1001; 1051; 1061; 1071; 1011; 1031

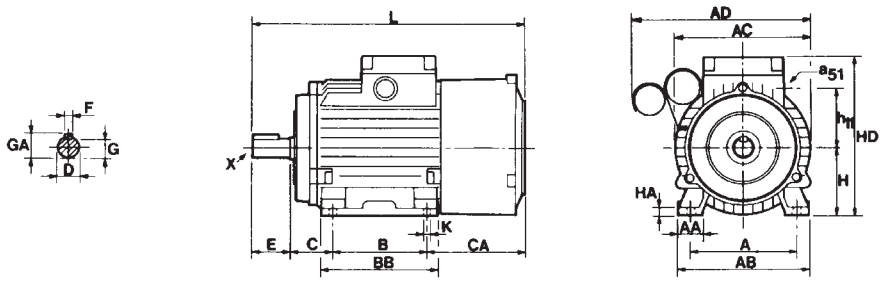

MOTOR TYPE	DIMENSIONS (mm) A	AA	AB	AC	AD	B	BB	C	CA	H	HA	HD	h11	K	L	a51 hole ø	a51 cable gland	SHAFT EXTENSIONS D*	E	F	G	GA	X
BF5D 80M	125	27.5	150	157	212	100	120	50	116	80	9.5	192.5	68.5	10	303	22.5	TA16	19	40	6	15.5	21.5	M6 x 16
BF5D 90S	140	30	171	180	240	100	127	56	117	90	10	210	78.5	10	320	22.5	TA16	24	50	8	20	27	M8 x 19
BF5D 90L	140	30	171	180	240	125	152	56	117	90	10	210	78.5	10	345	22.5	TA16	24	50	8	20	27	M8 x 19
BF5D 100L	160	35	195	200	250	140	175	63	123	100	12	235.5	90.5	12	383	28.5	TA21	28	60	8	24	31	M10 x 22

* Tolerances ISO: 19,24 and 28 j6 $\begin{pmatrix} +0.009 \\ -0.004 \end{pmatrix}$

FLANGE MOUNTED MOTORS

FREE-GOING FIXING HOLES
IM 3001; 3011; 3031

THREADED FIXING HOLES
IM 3601; 3611; 3631

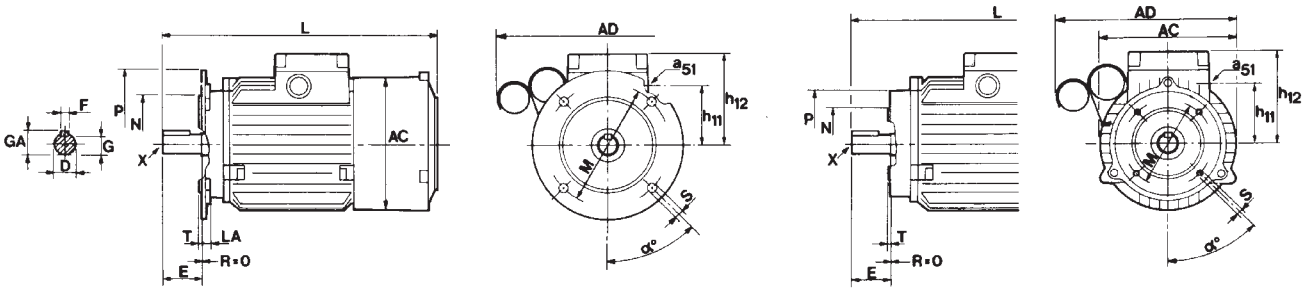

MOTOR TYPE	FLANGE DIMENSIONS Form IM	IEC	M	N	P	LA	T	α	S	MAIN DIMENSIONS AC	AD	h11	h12	L	a51 hole ø	a51 cable gland	SHAFT EXTENSIONS D*	E	F	G	GA	X
BF5D 80M	30--	F165	165	130	200	8	3.5	45°	12	157	234	68.5	113	303	22.5	TA16	19	40	6	15.5	21.5	M6 x 16
	36--	F100	100	80	120	–	3	45°	M6	157	212	68.5	113	303	22.5	TA16	19	40	6	15.5	21.5	M6 x 16
BF5D 90S	30--	F165	165	130	200	10	3.5	45°	12	180	250	78.5	120	320	22.5	TA16	24	50	8	20	27	M8 x 19
	36--	F115	115	95	140	–	3	45°	M8	180	240	78.5	120	320	22.5	TA16	24	50	8	20	27	M8 x 19
BF5D 90L	30--	F165	165	130	200	10	3.5	45°	12	180	250	78.5	120	345	22.5	TA16	24	50	8	20	27	M8 x 19
	36--	F115	115	95	140	–	3	45°	M8	180	240	78.5	120	345	22.5	TA16	24	50	8	20	27	M8 x 19
BF5D 100L	30--	F215	215	180	250	12	4	45°	15	200	275	90.5	136	383	28.5	TA21	28	60	8	24	31	M10 x 22
	36--	F130	130	110	160	–	3.5	45°	M8	200	250	90.5	136	383	28.5	TA21	28	60	8	24	31	M10 x 22

* Tolerances ISO: 19,24 and 28 j6 $\begin{pmatrix} +0.009 \\ -0.004 \end{pmatrix}$

SUBJECT TO MODIFICATION WITHOUT WARNING

5.6 ELECTRICAL DATA

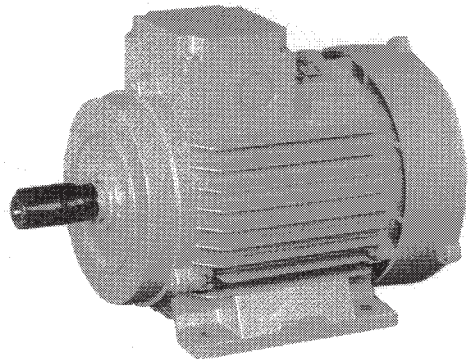

SQUIRREL-CAGE MOTORS LOW VOLTAGE

motors with shaft heights from 71 to 100 mm

ELECTRICAL DATA

MOTOR TYPE	RATING KW 50 Hz/60 Hz	SPEED RPM 50 Hz/60 Hz	In (1) A	EFFICIENCY % Full load	EFFICIENCY % 3/4 load	EFFICIENCY % 2/4 load	cos φ Full load	cos φ 3/4 load	cos φ 2/4 load	T_{max}/T_n	DIRECT STARTING T_s/T_n	DIRECT STARTING I_s/I_n	Y-Δ STARTING T_s/T_n	Y-Δ STARTING I_s/I_n	Tn N.m	MOMENT OF INERTIA kg.m²	WEIGHT kg
Synchronous speed: 3000 RPM / 3600 RPM																	
BF5 71 M42	**0,37 /0,44**	2810/3375	0,91	70	71	68	0,82	0,74	0,61	2,0	2,1	5,3	—	—	1,3	0,00042	5,8
BF5 71 M42	**0,55 /0,66**	2815/3380	1,42	73	72	65	0,80	0,71	0,56	2,1	2,0	5,0	—	—	1,9	0,00042	5,8
BF5 80 M42	**0,75 /0,90**	2855/3425	1,74	77	77	74	0,83	0,75	0,61	2,5	2,6	6,1	—	—	2,5	0,00058	8,9
BF5 80 M42	**1,1 /1,3**	2825/3390	2,6	77	76	73	0,82	0,76	0,58	2,4	2,3	5,3	—	—	3,7	0,00058	8,9
BF5 90 S22	**1,5 /1,8**	2845/3415	3,3	80	80	79	0,86	0,81	0,70	2,4	2,0	6,0	—	—	5,0	0,0014	11,9
BF5 90 L42	**2,2 /2,6**	2845/3415	4,7	81	81	79	0,85	0,80	0,69	2,5	2,3	6,5	—	—	7,4	0,0017	14,0
BF5 100 L42	**3 /3,6**	2875/3450	6,3	83	82	80	0,86	0,80	0,68	3,0	2,6	7,1	0,73	2,1	10,0	0,0032	20,0
Synchronous speed: 1500 RPM / 1800 RPM																	
BN5 71 M44 (2)	**0,185/0,22**	1375/1650	0,59	64	62	55	0,75	0,65	0,50	2,0	1,8	3,9	—	—	1,3	0,00095	5,8
BF5 71 M44	**0,25 /0,30**	1385/1660	0,78	64	63	56	0,75	0,65	0,52	2,1	1,9	3,9	—	—	1,7	0,00095	5,8
BF5 71 M44	**0,37 /0,44**	1380/1655	1,23	65	61	52	0,72	0,62	0,47	2,2	2,0	3,7	—	—	2,6	0,00095	5,8
BF5 80 M44	**0,55 /0,66**	1390/1670	1,48	70	70	65	0,78	0,69	0,54	2,2	1,9	4,5	—	—	3,8	0,0015	8,3
BF5 80 M44	**0,75 /0,90**	1375/1650	2,0	70	70	66	0,81	0,72	0,54	2,1	1,8	4,1	—	—	5,3	0,0015	8,3
BF5 90 S24	**1,1 /1,3**	1380/1655	2,9	72	72	70	0,79	0,68	0,52	2,1	2,0	4,3	—	—	7,7	0,0031	11,5
BF5 90 L44	**1,5 /1,8**	1380/1655	3,9	74	74	70	0,78	0,71	0,53	2,3	2,2	4,5	—	—	10,4	0,0037	13,4
BF5 100 L24	**2,2 /2,6**	1395/1675	5,3	79	79	78	0,79	0,72	0,56	2,0	1,8	4,7	—	—	15,0	0,0045	18,0
BF5 100 L44	**3 /3,6**	1400/1680	7,1	80	80	79	0,80	0,73	0,58	2,2	1,9	5,3	0,60	1,6	20,5	0,0056	21,0
Synchronous speed: 1000 RPM / 1200 RPM																	
BN5 71 M46 (2)	**0,12 /0,14**	925/1110	0,60	48	45	36	0,63	0,56	0,46	2,4	1,9	2,7	—	—	1,3	0,00095	5,8
BF5 71 M46	**0,185/0,22**	900/1080	0,87	48	41	35	0,67	0,62	0,50	2,4	1,9	2,6	—	—	1,9	0,00095	5,8
BF5 71 M46	**0,25 /0,30**	910/1090	1.10	55	52	43	0,67	0,59	0,49	2,4	2,0	2,9	—	—	2,6	0,00095	5,8
BF5 80 M46	**0,37 /0,44**	925/1110	1,30	65	63	54	0,67	0,58	0,46	2,5	2,1	3,5	—	—	3,8	0,0015	8,3
BF5 80 M66	**0,55 /0,66**	905/1085	1,90	64	63	53	0,71	0,63	0,47	2,3	2,1	3,4	—	—	5,8	0,0018	9,0
BF5 90 S26	**0,75 /0,90**	875/1050	2,4	68	68	64	0,72	0,62	0,48	2,0	1,8	3,5	—	—	8,2	0,0031	11,5
BF5 90 L66	**1,1 /1,3**	880/1055	3,3	70	69	65	0,71	0,61	0,48	2,0	2,2	3,3	—	—	11.8	0,0045	14,9
BF5 100 L46	**1,5 /1,8**	920/1105	4,3	75	76	73	0,71	0,63	0,50	2,1	1,9	4,0	—	—	15,5	0,0056	21,0
Synchronous speed: 750 RPM / 900 RPM																	
BF5 71 M48	**0,09 /0,11**	690/ 825	0,80	28	26	25	0,61	0,57	0,57	3,0	2,6	2,1	—	—	1,3	0,00095	5,8
BF5 71 M48	**0,12 /0,14**	670/ 805	0,80	33	28	25	0,69	0,62	0,57	2,2	1,8	2,1	—	—	1,7	0,00095	5,8
BF5 80 M48	**0,185/0,22**	680/ 815	0,95	47	40	33	0,65	0,58	0,50	2,2	1,6	2,4	—	—	2,6	0,0015	8,3
BF5 80 M68	**0,25 /0,30**	680/ 815	1,20	50	43	36	0,63	0,56	0,48	2,5	2,0	2,6	—	—	3,5	0,0019	8,9
BF5 90 S28	**0,37 /0,44**	660/ 790	1,60	56	55	47	0,63	0,55	0,46	2,0	1,8	2,5	—	—	5,4	0,0031	11,5
BF5 90 L68	**0,55 /0,66**	675/ 810	2,50	61	60	50	0,57	0,50	0,40	2,5	2,3	2,8	—	—	7,8	0,0045	14,9
BF5 100 L48	**0,75 /0,90**	695/ 830	2,90	70	66	60	0,59	0,51	0,40	2,1	1,7	3,2	—	—	10,3	0,0056	21,0
BF5 100 L48	**1,1 /1,3**	685/ 820	4,20	70	67	61	0,57	0,49	0,37	2,2	1,9	3,3	—	—	15,3	0,0056	21,0

(1) 380-415 V / 440-480 V 50/60 Hz
(2) Motor without fan (cooling form IC 0040)

SQUIRREL-CAGE MOTORS
LOW VOLTAGE
motors with shaft heights from 112 to 160 mm

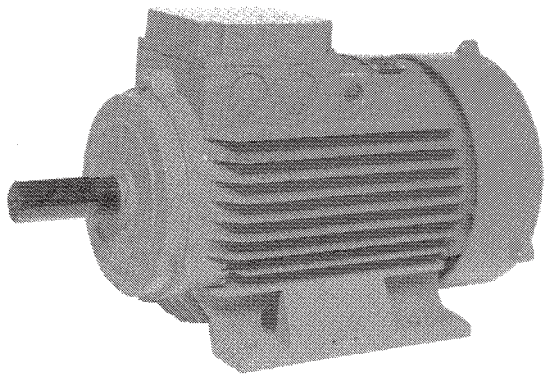

ELECTRICAL DATA

MOTOR TYPE	RATING KW 50 Hz/60 Hz	SPEED RPM 50 Hz/60 Hz	In (1) A	EFFICIENCY % Full load	EFFICIENCY % 3/4 load	EFFICIENCY % 2/4 load	cos φ Full load	cos φ 3/4 load	cos φ 2/4 load	T_{max}/T_n	DIRECT STARTING T_s/T_n	DIRECT STARTING I_s/I_n	Y-Δ STARTING T_s/T_n	Y-Δ STARTING I_s/I_n	Tn N.m	MOMENT OF INERTIA kg.m²	WEIGHT kg
Synchronous speed: 3000 RPM / 3600 RPM																	
* **BF5** 112 M22	**4 / 4,8**	2875/3450	8,2	84	83	81	0,86	0,81	0,69	3,0	3,2	7,6	0,76	2,2	13,3	0,0041	24
* **BF5** 132 S42	**5,5/ 6,6**	2885/3460	11,0	85	85	84	0,89	0,87	0,79	2,9	2,5	7,5	0,78	2,3	18,1	0,012	39
* **BF5** 132 S62	**7,5/ 9**	2890/3465	14,6	86	86	85	0,90	0,88	0,80	2,8	2,8	7,8	0,76	2,4	24,8	0,014	45
* **BF5** 160 M22	**11 /13,2**	2915/3500	21,5	88	88	87	0,86	0,83	0,75	2,4	2,2	6,5	0,60	2,1	36,0	0,024	65
* **BF5** 160 M42	**15 /18**	2920/3505	29,0	89	90	89	0,85	0,81	0,72	2,3	2,2	7,0	0,70	2,2	49,0	0,027	70
* **BF5** 160 L62	**18,5/22,2**	2915/3500	34,5	91	91	90	0,89	0,85	0,78	2,4	2,2	7,5	0,61	2,2	61,0	0,035	83
Synchronous speed: 1500 RPM / 1800 RPM																	
* **BF5** 112 M44	**4 / 4,8**	1410/1690	9,1	82	82	81	0,78	0,73	0,59	2,3	2,3	5,5	0,54	1,7	27,1	0,0072	25
* **BF5** 132 S44	**5,5/ 6,6**	1435/1720	12,8	82	82	80	0,78	0,73	0,57	2,6	1,9	5,5	0,51	1,6	36,5	0,014	38
* **BF5** 132 M84	**7,5/ 9**	1435/1720	16,5	83,5	83	82	0,81	0,75	0,59	2,5	2,0	5,7	0,54	1,7	50,0	0,019	45
* **BF5** 160 M44	**11 /13,2**	1440/1730	23,5	87	88	87	0,81	0,76	0,65	2,1	2,1	5,7	0,62	1,7	73,0	0,038	69
* **BF5** 160 L64	**15 /18**	1445/1735	32,5	88	88	87	0,80	0,75	0,63	2,6	2,9	6,8	0,75	2,0	99,5	0,047	81
Synchronous speed: 1000 RPM / 1200 RPM																	
BF5 112 M46	**2,2/ 2,6**	925/1110	6,0	76	77	75	0,72	0,66	0,51	2,0	1,9	4,0	—	—	22,6	0,0072	25
BF5 132 S26	**3 / 3,6**	930/1115	7,4	78	77	73	0,77	0,68	0,56	2,2	1,7	4,7	0,47	1,4	30,6	0,0165	33
BF5 132 M46	**4 / 4,8**	935/1120	9,4	80	80	76	0,76	0,68	0,57	2,3	1,7	5,0	0,45	1,5	40,7	0,0215	35
BF5 132 M86	**5,5/ 6,6**	935/1120	13,0	81	81	78	0,77	0,68	0,57	2,2	1,8	5,4	0,50	1,7	56,3	0,030	49
BF5 160 M26	**7,5/ 9**	955/1145	17,0	85	86	85,5	0,76	0,72	0,58	2,1	2,0	5,2	0,54	1,6	73,5	0,049	58
BF5 160 L66	**11 /13,2**	955/1145	25,0	87	88	87	0,76	0,71	0,57	2,1	2,1	5,4	0,55	1,5	108,0	0,070	77
Synchronous speed: 750 RPM / 900 RPM																	
BF5 112 M48	**1,5/ 1,8**	680/ 815	5,5	70	69	65	0,60	0,53	0,43	2,0	1,7	3,0	—	—	21,0	0,0072	25
BF5 132 S48	**2,2/ 2,6**	700/ 840	6,3	77	76	70	0,70	0,61	0,48	2,2	1,7	4,5	—	—	30,3	0,021	37
BF5 132 M88	**3 / 3,6**	695/ 835	8,7	76	75	70	0,69	0,62	0,48	2,3	2,1	4,1	0,55	1,2	41,5	0,030	45
BF5 160 M28	**4 / 4,8**	715/ 855	11,0	80,5	81	78	0,70	0,62	0,50	2,1	2,0	4,3	0,54	1,3	53,0	0,072	62
BF5 160 M48	**5,5/ 6,6**	705/ 845	14,0	82	83	82	0,71	0,65	0,52	2,0	1,9	4,0	0,51	1,2	74,0	0,083	68
BF5 160 L68	**7,5/ 9**	700/ 840	18,0	82,5	84	83	0,76	0,70	0,59	2,0	1,9	4,3	0,46	1,3	102,0	0,11	81

(1) 380-415 V / 440-480 V 50/60 Hz

SQUIRREL-CAGE MOTORS
LOW VOLTAGE

motors with shaft heights from 180 to 225 mm

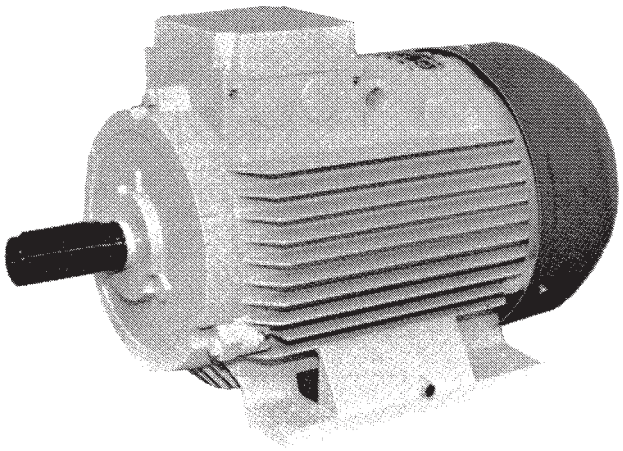

ELECTRICAL DATA

MOTOR TYPE	RATING kW	RATING hp	SPEED RPM	In at 380 V A	EFFICIENCY % Full load	EFFICIENCY % 3/4 load	EFFICIENCY % 2/4 load	cos φ Full load	cos φ 3/4 load	cos φ 2/4 load	T_{max}/T_n	DIRECT STARTING T_s/T_n	DIRECT STARTING I_s/I_n	Y-Δ STARTING T_s/T_n	Y-Δ STARTING I_s/I_n	Tn N.m	MOMENT OF INERTIA kg.m²	WEIGHT kg
Synchronous speed: 3 000 RPM																		
BF5 180 M42	**22**	30	2 910	40	89	89	87,5	0,93	0,93	0,90	2,7	2,7	7,8	0,73	2,4	72	0,075	120
BF5 200 L62	**30**	40	2 940	55,8	91,8	91,5	90	0,89	0,89	0,86	2,4	2,3	6,9	0,62	2,1	98	0,136	149
BF5 200 L82	**37**	50	2 940	68,3	92,5	92,5	91,5	0,89	0,90	0,87	2,3	2,5	7,1	0,68	2,2	120	0,170	175
BF5 225 M42	**45**	60	2 940	82,6	93	92,5	91,5	0,89	0,88	0,84	2,4	2,6	7,8	0,70	2,4	146	0,181	220
Synchronous speed: 1 500 RPM																		
BF5 180 M44	**18,5**	25	1 465	35	90	90	89	0,88	0,84	0,75	2,7	2,4	7,0	0,65	2,1	121	0,100	113
BF5 180 L64	**22**	30	1 460	42,5	90	90,5	90	0,88	0,85	0,78	2,5	2,2	7,0	0,59	2,1	144	0,130	125
BF5 200 L64	**30**	40	1 465	60	90	90	88,5	0,83	0,81	0,72	2,8	2,3	7,0	0,63	2,1	195	0,177	149
BF5 225 S24	**37**	50	1 470	71,2	91,8	91,5	90	0,86	0,83	0,74	2,9	2,8	7,3	0,76	2,2	240	0,211	200
BF5 225 M44	**45**	60	1 465	84,3	92,2	91,5	90	0,88	0,85	0,76	2,7	2,7	7,2	0,73	2,2	294	0,236	210
Synchronous speed: 1 000 RPM																		
BF5 180 L46	**15**	20	965	32,5	87	87,5	86,5	0,80	0,76	0,64	2,4	2,2	5,5	0,60	1,7	148	0,14	115
BF5 200 L26	**18,5**	25	975	39,5	89	89,5	89	0,80	0,78	0,68	2,3	2,4	5,5	0,65	1,7	180	0,23	125
BF5 200 L46	**22**	30	970	46	89	90	89,5	0,82	0,79	0,70	2,1	2,5	5,6	0,68	1,7	216	0,26	140
BF5 225 M46	**30**	40	978	62,5	90	90	88,5	0,81	0,78	0,67	2,7	3,3	6,6	0,89	2,0	293	0,36	190
Synchronous speed: 750 RPM																		
BF5 180 L48	**11**	15	715	26	84,5	86	85,5	0,76	0,72	0,59	2,1	1,9	4,2	0,51	1,3	147	0,15	115
BF5 200 L48	**15**	20	725	34,5	88	88	87	0,75	0,68	0,56	2,4	2,1	5,3	0,57	1,6	196	0,26	140
BF5 225 S28	**18,5**	25	725	40,7	88,5	89	88,5	0,78	0,73	0,62	2,2	1,9	5,2	0,51	1,6	244	0,30	170
BF5 225 M48	**22**	30	725	48,2	89	89,5	88	0,78	0,73	0,61	2,3	2,1	5,5	0,57	1,7	289	0,34	180

SQUIRREL-CAGE MOTORS
LOW VOLTAGE

motors with shaft heights from 250 to 400 mm

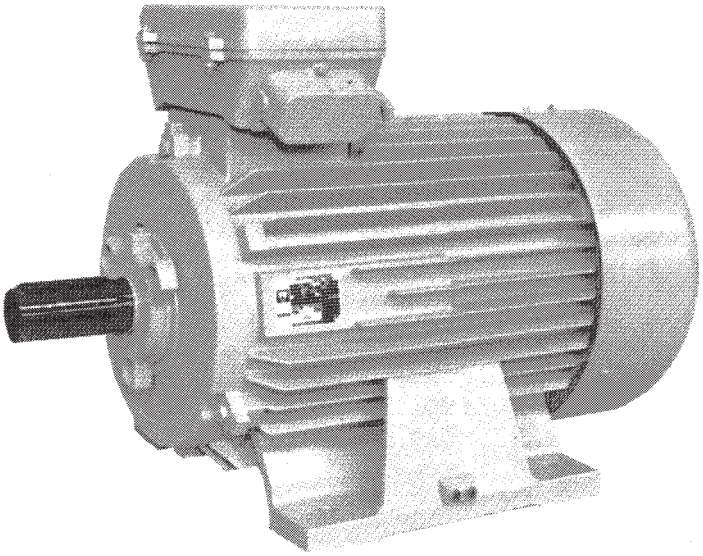

ELECTRICAL DATA

MOTOR TYPE	RATING kW	RATING hp	SPEED RPM	In at 380 V A	EFFICIENCY % Full load	EFFICIENCY % 3/4 load	EFFICIENCY % 2/4 load	cos φ Full load	cos φ 3/4 load	cos φ 2/4 load	T_{max}/T_n	DIRECT STARTING T_s/T_n	DIRECT STARTING I_s/I_n	Y-Δ STARTING T_s/T_n	Y-Δ STARTING I_s/I_n	Tn N.m	MOMENT OF INERTIA kg.m²	WEIGHT kg
Synchronous speed: 3 000 RPM																		
BF4 250 M42	**55**	75	2 965	100	93	92,5	91,5	0,90	0,89	0,85	3,3	2,5	8,0	0,67	2,5	171	0,39	445
BF4 280 SA42	**75**	100	2 965	135	93,5	93	92	0,90	0,90	0,87	3,2	2,9	8,0	0,78	2,5	242	0,51	525
BF4 280 MA62	**90**	125	2 960	158	94	93,8	92,7	0,92	0,92	0,90	3,0	2,9	8,0	0,78	2,6	290	0,61	580
BF4 315 SA42	**110**	150	2 965	194	94,5	94,5	94	0,90	0,89	0,87	3,5	2,6	8,0	0,70	2,3	355	0,96	734
BF4 315 MA62	**132**	180	2 965	232	95	95	94,8	0,91	0,90	0,86	3,5	2,7	8,4	0,73	2,5	425	1,08	814
BF3 315 MA62	**160**	220	2 970	290	93,5	92,5	90,5	0,90	0,89	0,88	2,5	1,7	7,1	0,46	2,1	516	1,8	1 075
BF3 315 MA82	**200**	270	2 970	355	94,5	93,5	92	0,91	0,91	0,87	2,8	1,9	6,5	0,52	2,0	643	2,2	1 150
BF3 355 MA22	**220**	300	2 985	386	95,5	95	93	0,90	0,88	0,82	3,5	1,7	7,9	0,55	2,5	704	2,8	1 450
BF3 355 MA42	**260**	350	2 980	448	95,5	95,5	94	0,92	0,91	0,87	2,9	1,6	7,6	0,45	2,3	833	3,3	1 700
BF3 355 MA62	**290**	400	2 980	500	95,5	95,5	94	0,92	0,91	0,87	2,8	1,6	7,0	0,45	2,1	930	4,0	1 775
BF3 355 MA82	**330**	450	2 980	575	95,5	95,5	94,5	0,92	0,91	0,87	2,2	1,7	7,0	0,46	2,1	1 058	4,3	1 850
BF3 400 LA42	**370**	500	2 980	631	95,5	95,5	94,5	0,91	0,90	0,87	2,2	1,7	6,5	0,46	2,0	1 186	5,3	2 500
BF3 400 LA62	**400**	545	2 980	695	95,5	95	94,5	0,90	0,89	0,86	2,4	1,6	6,4	0,43	1,9	1 283	5,8	2 650
BF3 400 LA82	**440**	600	2 980	760	96	95,5	94,5	0,90	0,89	0,86	2,4	1,6	6,4	0,43	1,9	1 410	6,9	2 750
Synchronous speed: 1 500 RPM																		
BF4 250 M44	**55**	75	1 480	108	91,5	91	89,5	0,84	0,81	0,73	2,9	3,0	7,5	0,77	2,2	355	0,81	445
BF4 280 SA44	**75**	100	1 480	147	92,8	92,5	91	0,83	0,81	0,73	2,5	2,7	7,5	0,73	2,2	483	1,06	510
BF4 280 MA84	**90**	125	1 485	179	93,5	93	91,5	0,83	0,81	0,73	2,7	3,0	7,8	0,81	2,4	579	1,37	594
BF4 315 SA44	**110**	150	1 480	206	94	94	93	0,87	0,87	0,81	2,7	3,4	7,7	0,92	2,3	710	1,63	750
BF4 315 MA64	**132**	180	1 480	242	94	94	93	0,88	0,88	0,84	2,7	3,0	7,7	0,81	2,3	851	1,95	820
BF3 315 MA64	**160**	220	1 485	293	94,5	94	93	0,88	0,87	0,83	2,6	1,8	7,1	0,50	2,2	1 029	3,2	1 150
BF3 315 MA84	**200**	270	1 485	365	94,5	94	93	0,87	0,86	0,81	2,4	1,9	7,5	0,54	2,2	1 287	3,8	1 275
BF3 355 MA24	**220**	300	1 485	390	95,5	95	94	0,90	0,89	0,86	2,6	1,8	6,2	0,50	1,9	1 415	5,8	1 850
BF3 355 MA44	**260**	350	1 485	460	95,5	95	94,5	0,88	0,87	0,82	2,2	1,9	6,5	0,51	2,0	1 673	6,6	1 975
BF3 355 MA64	**290**	400	1 490	510	95,5	95	94,5	0,90	0,89	0,86	2,2	2,0	6,7	0,55	2,0	1 860	7,9	2 100
BF3 355 MA84	**315**	425	1 490	548	95,5	95,5	94,5	0,91	0,90	0,87	2,7	2,1	6,8	0,60	2,1	2 020	7,9	2 150
BF3 400 LA24	**330**	450	1 490	571	95,5	95	94	0,89	0,91	0,90	2,0	1,3	6,4	0,35	1,9	2 116	13,6	2 625
BF3 400 LA44	**370**	500	1 490	644	95,5	95	94	0,91	0,93	0,92	2,0	1,3	6,0	0,35	1,7	2 373	14,8	2 750
BF3 400 LA64	**400**	545	1 495	696	96	95,5	95	0,91	0,91	0,89	2,2	1,7	7,2	0,48	2,1	2 566	16,3	2 875
BF3 400 LA84	**440**	600	1 495	762	96,5	96	95,5	0,91	0,91	0,89	2,2	1,7	7,2	0,48	2,1	2 838	17,5	2 950

SQUIRREL-CAGE MOTORS
LOW VOLTAGE

motors with shaft heights from 250 to 400 mm

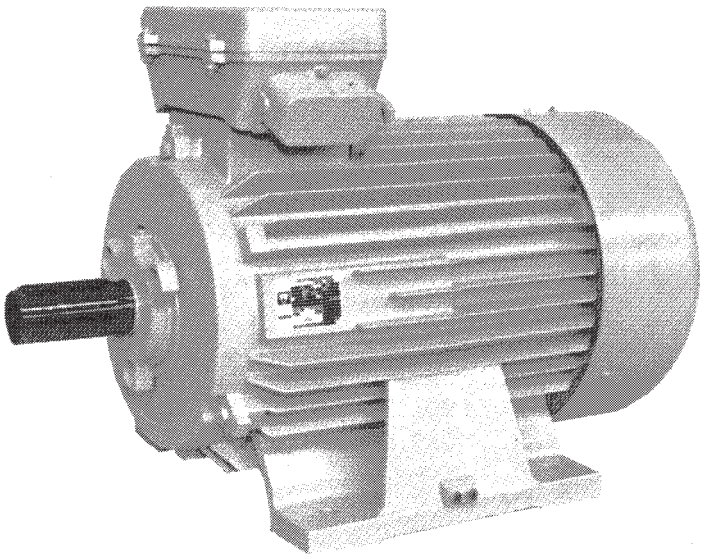

ELECTRICAL DATA

MOTOR TYPE	RATING kW	RATING hp	SPEED RPM	In at 380 V A	EFFICIENCY % Full load	EFFICIENCY % 3/4 load	EFFICIENCY % 2/4 load	cos φ Full load	cos φ 3/4 load	cos φ 2/4 load	T_{max}/T_n	DIRECT STARTING T_s/T_n	DIRECT STARTING I_s/I_n	Y-Δ STARTING T_s/T_n	Y-Δ STARTING I_s/I_n	Tn N.m	MOMENT OF INERTIA kg.m²	WEIGHT kg
Synchronous speed: 1 000 RPM																		
BF4 250 M26	**37**	50	985	80	90,5	90,5	89	0,78	0,73	0,62	2,7	2,6	7,1	0,70	2,2	358	0,81	370
BF4 280 SA26	**45**	60	985	94	91	91	90	0,80	0,76	0,67	2,6	2,6	6,5	0,70	2,0	436	1,0	450
BF4 280 MA46	**55**	75	985	108	92,5	92	91	0,83	0,78	0,70	2,8	2,7	7,0	0,72	2,2	534	1,3	490
BF4 315 SA46	**75**	100	990	154	93	93	92	0,79	0,76	0,66	2,4	2,6	6,8	0,70	2,0	724	2,3	680
BF4 315 MA66	**90**	125	990	181	92,8	93	92,5	0,81	0,79	0,70	2,4	3,0	7,1	0,81	2,2	874	2,9	775
BF3 315 MA66	**110**	150	985	211	94,5	94,5	94	0,84	0,80	0,72	2,0	1,8	5,7	0,49	1,7	1 067	4,4	1 050
BF3 315 MA86	**132**	180	990	255	95	94,5	94	0,83	0,80	0,72	2,0	1,7	5,9	0,48	1,8	1 274	5,0	1 150
BF3 315 MA106	**160**	220	990	310	95	95	94,5	0,83	0,80	0,72	2,0	1,7	5,9	0,48	1,8	1 544	5,4	1 250
BF3 355 MA66	**200**	270	990	368	95	95	94,5	0,87	0,84	0,77	2,3	1,4	6,3	0,40	1,9	1 930	11,3	1 925
BF3 355 MA86	**250**	340	995	447	96	96	95	0,87	0,84	0,77	2,7	1,5	6,7	0,42	2,0	2 403	13,8	2 050
BF3 400 LA66	**290**	400	995	518	95,5	95	94,5	0,88	0,86	0,81	2,0	1,7	6,5	0,46	1,9	2 785	20,0	2 875
BF3 400 LA86	**330**	450	995	582	96	95,5	95	0,88	0,87	0,82	2,3	1,7	6,8	0,46	2,0	3 169	23,5	3 025
Synchronous speed: 750 RPM																		
BF4 250 M48	**30**	40	735	66	90	89,5	87	0,77	0,73	0,62	2,5	1,7	4,8	0,52	1,4	390	0,98	395
BF4 280 SA48	**37**	50	735	81	89,5	89	87	0,78	0,73	0,63	2,4	1,9	5,0	0,51	1,5	481	1,2	500
BF4 280 MA68	**45**	60	730	93	91	90,5	89,5	0,80	0,77	0,69	2,0	1,6	4,8	0,43	1,4	589	1,5	555
BF4 315 SA48	**55**	75	740	120	93	92,5	91,5	0,75	0,70	0,57	3,0	2,0	5,8	0,55	1,7	711	2,3	700
BF4 315 MA68	**75**	100	735	156	93,5	93,5	92,5	0,78	0,73	0,60	2,7	2,0	5,6	0,50	1,7	975	2,9	790
BF3 315 MA68	**90**	125	740	182	93	93	92,5	0,80	0,75	0,66	1,8	1,6	5,3	0,45	1,6	1 162	4,8	1 100
BF3 315 MA88	**110**	150	740	224	94	93,5	93	0,80	0,75	0,66	2,0	1,6	5,3	0,45	1,6	1 420	5,9	1 175
BF3 315 MA108	**132**	180	740	264	94	94	93,5	0,80	0,75	0,66	2,0	1,6	5,3	0,45	1,6	1 704	6,8	1 225
BF3 355 MA48	**150**	200	745	280	95,5	95,5	95	0,85	0,83	0,76	2,2	1,7	5,5	0,46	1,7	1 924	12,5	1 900
BF3 355 MA68	**185**	250	745	350	94,5	94,5	94	0,85	0,83	0,77	2,3	1,7	6,2	0,49	1,9	2 373	15,0	2 100
BF3 355 MA88	**220**	300	745	420	95,5	95,5	95	0,83	0,82	0,76	2,8	1,5	6,3	0,41	1,9	2 808	17,8	2 285
BF3 400 LA68	**260**	350	745	475	95	94,5	93	0,85	0,80	0,71	2,4	1,9	6,7	0,51	2,1	3 335	28,5	2 850
BF3 400 LA88	**290**	400	745	550	95,5	95	95	0,83	0,80	0,73	2,0	1,7	6,5	0,46	2,0	3 720	31,7	3 050

ELECTRICAL DATA

MOTOR TYPE	RATING kW	RATING hp	SPEED RPM	In at 380 V A	EFFICIENCY % Full Load	EFFICIENCY % 3/4 Load	EFFICIENCY % 2/4 Load	POWER FACTOR cos φ Full Load	POWER FACTOR cos φ 3/4 Load	POWER FACTOR cos φ 2/4 Load	T_{max}/T_n	DIRECT START T_s/T_n	DIRECT START I_s/I_n	Y-Δ START T_s/T_n	Y-Δ START I_s/I_n	T_n N.m	MOMENT OF INERTIA kg.m²	WEIGHT kg.
Synchronous speed: 3 000 RPM																		
BFGC3 90 S 32	0,75	1	2 870	1,8	69,5	66,5	60	0,90	0,87	0,82	3,5	2,5	7,0	—	—	2,5	0,0016	30
BFGC3 90 S 32	1,1	1,5	2 855	2,5	76	74,5	70	0,89	0,86	0,80	2,6	2,5	6,2	—	—	3,7	0,0016	30
BFGC3 90 S 32	1,5	2	2 845	3,3	78,5	78,5	76	0,87	0,84	0,75	2,3	2,3	6,0	—	—	5,0	0,0016	30
BFGC3 90 L 52	2,2	3	2 820	4,8	79	79,5	77	0,89	0,86	0,78	2,3	2,6	6,2	—	—	7,5	0,0019	40
BFGC3 100 L 22A	3	4	2 850	6,3	80,5	81	78	0,90	0,87	0,79	2,6	2,0	6,9	0,57	2,1	10	0,0035	50
BFGC3 112 M 22	4	5,5	2 880	8,0	83,5	84	81,5	0,90	0,89	0,83	2,8	2,0	7,4	0,57	2,2	13	0,009	65
BFGC3 132 S 22	5,5	7,5	2 890	11	85	85	83	0,91	0,90	0,85	2,5	2,3	6,5	0,63	1,9	18	0,018	85
BFGC3 132 S 42	7,5	10	2 900	15	84	83	80	0,91	0,88	0,88	3,0	2,5	7,3	0,70	2,2	25	0,020	90
BFGC3 160 M 22	11	15	2 895	22	82,5	81	77,5	0,92	0,90	0,88	2,2	1,8	5,5	0,49	1,6	36	0,036	120
BFGC3 160 M 42	15	20	2 905	29	86	85,5	83	0,91	0,90	0,85	2,5	2,2	6,8	0,59	2,0	49	0,048	135
BFGC3 160 L 62	18,5	25	2 920	34	88,0	87,5	85,0	0,93	0,92	0,88	2,7	2,5	7,2	0,85	2,2	61	0,058	160
BFGC3 180 M 42	22	30	2 920	41	89	88,5	87,5	0,92	0,91	0,89	2,2	1,8	6,1	0,50	1,8	72	0,098	205
BFGC3 200 L 22	30	40	2 950	57	89,5	88,5	86	0,89	0,89	0,85	2,5	2,0	6,9	0,55	2,1	97	0,13	275
BFGC3 200 L 42	37	50	2 950	68	91,5	91	89,5	0,90	0,89	0,85	2,6	2,1	6,7	0,57	2,0	120	0,16	290
BFGC3 225 M 42	45	60	2 945	84	90	89	86,5	0,89	0,88	0,84	3,0	2,8	7,5	0,86	2,3	143	0,17	350
BFGC4 250 M 42	55	75	2 965	100	91	90	87,5	0,92	0,91	0,88	3,5	2,0	7,6	0,55	2,4	177	0,44	450
BFGC4 280 SA 42	75	100	2 960	131	92	91,5	89,5	0,94	0,94	0,91	3,6	2,4	7,9	0,71	2,5	242	0,51	575
BFGC4 280 MA 62	90	125	2 965	156	92,5	92	90	0,94	0,94	0,90	3,6	2,5	7,9	0,72	2,6	290	0,61	620
BFGC4 315 SA 42	110	150	2 970	194	93,5	92,5	91	0,92	0,91	0,88	3,6	2,6	7,6	0,70	2,3	354	0,98	810
BFGC4 315 MA 62	132	180	2 970	235	91,5	90,5	88	0,92	0,91	0,88	3,5	2,4	7,7	0,73	2,5	425	1,2	890
BFGC3 315 MA 62	160	220	2 970	285	93,5	93	91,5	0,91	0,91	0,88	2,5	1,6	6,0	0,43	1,8	515	1,8	1150
BFGC3 315 MA 82	200	270	2 970	355	94,5	93,5	92	0,91	0,91	0,87	2,8	1,9	6,5	0,51	2,0	643	2,2	1250
BFGC3 355 MA 22	220	300	2 985	386	95,5	95	93,5	0,90	0,88	0,82	3,5	1,7	7,8	0,55	2,5	704	2,8	1550
BFGC3 355 MA 42	260	350	2 980	448	95,5	95,5	94	0,92	0,91	0,87	2,9	1,6	7,5	0,45	2,3	833	3,3	1800
BFGC3 355 MA 62	290	400	2 980	500	95,5	95,5	94	0,92	0,91	0,87	2,8	1,6	7,0	0,45	2,1	930	4,0	1875
BFGC3 355 MA 82	330	450	2 980	575	95,5	95,5	94,5	0,92	0,91	0,87	2,2	1,7	6,5	0,46	2,0	1058	4,3	1950
BFGC3 400 LA 42	370	500	2 980	631	95,5	95,5	94,5	0,91	0,90	0,87	2,2	1,7	6,5	0,46	1,9	1186	5,3	2650
BFGC3 400 LA 62	400	545	2 980	695	95,5	95	94,5	0,90	0,89	0,86	2,4	1,6	6,4	0,43	1,9	1283	5,8	2800
BFGC3 400 LA 82	440	600	2 980	760	96	95,5	94,5	0,90	0,89	0,86	2,4	1,6	6,4	0,43	1,9	1410	6,9	2900
Synchronous speed: 1 500 RPM																		
BFGC3 90 S 34A	0,37	0,5	1 450	1,1	69,5	66,5	59	0,71	0,64	0,53	3,7	3,6	7,2	—	—	2,4	0,0035	30
BFGC3 90 S 34A	0,55	0,75	1 450	1,6	75	73	67	0,72	0,64	0,51	3,5	3,5	7,0	—	—	3,6	0,0035	30
BFGC3 90 S 34A	0,75	1	1 445	2,3	75,5	73,5	67	0,66	0,58	0,44	3,6	3,4	6,5	—	—	5,0	0,0035	30
BFGC3 90 S 34A	1,1	1,5	1 420	3,0	73,5	73	67	0,74	0,66	0,50	2,9	2,3	5,3	—	—	7,4	0,0035	30
BFGC3 90 L 44A	1,5	2	1 410	3,8	76	76	72,5	0,78	0,70	0,55	2,7	2,6	5,3	—	—	10	0,004	35
BFGC3 100 L 34A	2,2	3	1 430	5,0	80,5	81,5	80,5	0,83	0,77	0,69	2,2	2,3	5,7	—	—	15	0,006	45
BFGC3 100 L 54A	3	4	1 425	6,8	82,5	82	79,5	0,81	0,69	0,56	2,9	2,8	6,9	0,75	2,0	20	0,007	50
BFGC3 112 M 44	4	5,5	1 430	8,5	82,5	83,5	81,5	0,85	0,80	0,68	2,9	2,6	7,0	0,71	2,1	27	0,013	60
BFGC3 132 S 44	5,5	7,5	1 440	11	86	87	86,5	0,88	0,85	0,75	2,4	2,0	6,7	0,55	2,0	36	0,025	85
BFGC3 132 M 64	7,5	10	1 435	15	87	88	87,5	0,88	0,86	0,78	2,4	2,4	6,9	0,65	2,1	50	0,032	100
BFGC3 160 M 44	11	15	1 450	22	88,5	88,5	87,5	0,86	0,83	0,75	2,3	2,5	6,3	0,67	1,9	72	0,067	140
BFGC3 160 L 64	15	20	1 460	30	89	89,5	88,5	0,87	0,84	0,77	2,4	2,5	6,7	0,67	2,0	98	0,085	160
BFGC3 180 M 44	18,5	25	1 455	35	90	91	89,5	0,89	0,88	0,83	2,1	2,0	5,9	0,55	1,8	121	0,11	210
BFGC3 180 L 64	22	30	1 460	42	91,5	92	91	0,88	0,88	0,83	2,2	2,4	6,4	0,70	2,3	144	0,13	230
BFGC3 200 L 44	30	40	1 475	58	91	90	88,5	0,84	0,80	0,72	2,8	2,9	7,0	0,75	2,1	194	0,23	290
BFGC3 225 S 24	37	50	1 470	72	91	91	89,5	0,86	0,83	0,76	2,6	2,7	7,2	0,72	2,1	239	0,26	315
BFGC3 225 M 44	45	60	1 470	87	92	92	91	0,86	0,82	0,75	2,9	2,8	7,6	0,75	2,3	292	0,29	340
BFGC4 250 M 44	55	75	1 480	108	91,5	91	89,5	0,84	0,81	0,73	2,5	2,8	7,6	0,70	2,3	355	0,85	465
BFGC4 280 SA 44	75	100	1 480	146	92,5	92	90	0,84	0,82	0,74	2,7	3,0	7,6	0,70	2,3	494	1,1	600
BFGC4 280 MA 84	90	125	1 485	175	94	93,5	92,5	0,83	0,81	0,73	2,6	3,0	7,8	0,95	2,5	580	1,3	650
BFGC4 315 SA 44	110	150	1 480	203	94	94	93	0,87	0,86	0,82	2,4	2,5	7,6	0,69	2,3	710	1,7	815
BFGC4 315 MA 64	132	180	1 480	242	94	94	93	0,88	0,86	0,82	2,3	2,4	7,0	0,64	2,2	853	1,9	895
BFGC3 315 MA 64	160	220	1 485	293	94,5	94	93	0,88	0,87	0,83	2,6	1,8	7,4	0,50	2,2	1029	3,2	1250
BFGC3 315 MA 84	200	270	1 485	370	94,5	94	93	0,87	0,86	0,81	2,4	1,9	7,3	0,51	2,2	1287	3,8	1350
BFGC3 355 MA 24	220	300	1 485	390	95,5	95	94	0,90	0,89	0,86	2,6	1,8	6,2	0,48	1,8	1415	5,8	1950
BFGC3 355 MA 44	260	350	1 485	460	95,5	95	94,5	0,88	0,87	0,82	2,2	1,9	6,5	0,51	1,9	1673	6,6	2075
BFGC3 355 MA 64	290	400	1 490	510	95,5	95	94,5	0,90	0,89	0,86	2,2	2,0	6,7	0,54	2,0	1860	7,9	2200
BFGC3 355 MA 84	315	425	1 490	548	95,5	95,5	94,5	0,91	0,90	0,87	2,7	2,1	7,0	0,61	2,1	2020	7,9	2250
BFGC3 400 LA 24	330	450	1 490	571	95,5	95	94	0,89	0,91	0,90	2,0	1,3	6,4	0,35	1,9	2116	13,6	2770
BFGC3 400 LA 44	370	500	1 490	644	95,5	95	94	0,91	0,93	0,92	2,0	1,3	6,0	0,35	1,8	2373	14,8	2500
BFGC3 400 LA 64	400	550	1 495	696	96	95,5	95	0,91	0,91	0,89	2,2	1,7	7,2	0,48	2,1	2566	16,3	3025
BFGC3 400 LA 84	440	600	1 495	762	96,5	96	95,5	0,91	0,91	0,89	2,2	1,7	7,2	0,48	2,1	2838	17,5	3200

T_s : Starting torque I_s : Starting current
T_n : Normal torque I_n : Normal current

ELECTRICAL DATA

MOTOR TYPE	RATING kW	RATING hp	SPEED RPM	In at 380 V A	EFFICIENCY % Full Load	EFFICIENCY % 3/4 Load	EFFICIENCY % 2/4 Load	POWER FACTOR cos φ Full Load	POWER FACTOR cos φ 3/4 Load	POWER FACTOR cos φ 2/4 Load	T_{max}/T_n	DIRECT START T_s/T_n	DIRECT START I_s/I_n	Y-Δ START T_s/T_n	Y-Δ START I_s/I_n	T_n N.m	MOMENT OF INERTIA kg.m²	WEIGHT kg.
Synchronous speed: 1 000 RPM																		
BFGC3 90 S 36A	0,37	0,5	905	1,2	59	59	54	0,76	0,69	0,59	2,0	1,9	3,0	—	—	3,8	0,0035	30
BFGC3 90 S 36A	0,55	0,75	900	1,7	68	68,5	66	0,76	0,68	0,53	2,7	1,8	3,5	—	—	5,9	0,0035	30
BFGC3 90 S 36A	0,75	1	900	2,3	66	67	62,5	0,74	0,65	0,50	2,0	1,6	3,5	—	—	8,0	0,0035	30
BFGC3 90 L 66	1,1	1,5	915	3,3	73	74,5	71,5	0,72	0,63	0,50	2,2	1,7	4,0	—	—	11	0,0037	45
BFGC3 100 L 16A	1,5	2	930	4,3	76,5	76	72	0,70	0,59	0,45	2,1	1,7	4,0	—	—	15	0,005	50
BFGC3 112 M 46	2,2	3	940	5,6	80,5	81,5	80	0,74	0,67	0,55	2,2	1,9	5,0	0,53	1,5	22	0,013	60
BFGC3 132 S 26	3	4	965	7,1	82,5	82,5	79	0,77	0,71	0,58	2,3	1,8	5,5	0,48	1,6	30	0,032	80
BFGC3 132 M 46	4	5,5	965	10	82,5	84,5	79,5	0,74	0,68	0,54	2,5	2,3	5,5	0,62	1,7	40	0,040	90
BFGC3 132 M 86	5,5	7,5	960	12,5	86,0	86	83,5	0,78	0,73	0,61	2,5	2,0	6,2	0,57	1,8	55	0,057	110
BFGC3 160 M 46	7,5	10	950	16	84,5	85	83,5	0,82	0,79	0,61	2,1	1,6	5,2	0,43	1,6	75	0,082	140
BFGC3 160 L 86	11	15	960	24	87,5	88	87	0,80	0,75	0,65	2,7	2,2	5,8	0,60	1,7	110	0,12	165
BFGC3 180 L 46	15	20	970	31	88,5	89,5	89	0,80	0,78	0,72	1,9	2,0	4,8	0,54	1,5	148	0,14	200
BFGC3 200 L 26	18,5	25	980	40	89,0	89,5	88	0,78	0,73	0,65	2,1	2,0	5,0	0,55	1,5	180	0,30	260
BFGC3 200 L 46	22	30	980	48	89	88,5	87	0,80	0,75	0,68	2,2	2,0	5,0	0,55	1,5	214	0,37	310
BFGC3 225 M 46	30	40	975	65	90,5	90,5	89	0,77	0,72	0,60	3,2	2,7	6,4	0,81	1,7	289	0,40	390
BFGC4 250 M 26	37	50	985	72	91,5	91	90	0,85	0,82	0,72	2,8	2,3	7,0	0,63	2,1	356	0,92	450
BFGC4 280 SA 26	45	60	985	84	92	92	91	0,89	0,87	0,79	2,9	2,2	6,6	0,60	2,0	436	1,0	610
BFGC4 280 MA 46	55	75	985	101	92,5	93	92	0,89	0,88	0,81	3,0	2,3	7,0	0,67	2,2	533	1,3	650
BFGC4 315 SA 46	75	100	990	154	93	93	92	0,79	0,76	0,66	2,4	2,6	6,8	0,70	2,0	724	2,1	740
BFGC4 315 MA 66	90	125	990	181	93,5	93,5	92,5	0,81	0,77	0,69	2,3	2,2	6,6	0,58	1,9	870	2,6	836
BFGC3 315 MA 66	110	150	985	211	94,5	94,5	94	0,84	0,80	0,72	2,0	1,8	5,7	0,49	1,7	1067	4,4	1125
BFGC3 315 MA 86	132	180	990	255	95	94,5	94	0,83	0,80	0,72	2,0	1,7	5,9	0,48	1,8	1274	5,0	1225
BFGC3 315 MA 106	160	220	990	310	95	95	94,5	0,83	0,80	0,72	2,0	1,7	5,9	0,48	1,8	1544	5,4	1350
BFGC3 355 MA 66	200	270	990	368	95	95	94,5	0,87	0,84	0,77	2,3	1,4	6,3	0,38	1,9	1930	11,5	2025
BFGC3 355 MA 86	250	340	995	447	96	96	95	0,87	0,84	0,77	2,7	1,5	6,7	0,40	2,0	2403	13,8	2150
BFGC3 400 LA 66	290	400	995	518	95,5	95	94,5	0,88	0,86	0,81	2,0	1,7	6,5	0,46	1,9	2785	20,0	3025
BFGC3 400 LA 86	330	450	995	582	96	95,5	95	0,88	0,87	0,82	2,3	1,7	6,8	0,46	2,0	3169	23,5	3175
Synchronous speed: 750 RPM																		
BFGC3 90 S 48	0,37	0,5	685	1,6	60,5	61	55	0,58	0,50	0,40	2,0	1,7	2,9	—	—	5,1	0,0035	40
BFGC3 90 L 68	0,55	0,75	680	2,2	65	64	60	0,58	0,49	0,39	2,1	1,7	3,2	—	—	7,7	0,0045	45
BFGC3 100 L 38A	0,75	1	710	3,0	63,5	60	58	0,60	0,53	0,42	2,3	1,7	4,0	—	—	10	0,005	50
BFGC3 100 L 58A	1,1	1,5	700	4,0	70	68	63	0,63	0,56	0,44	2,2	1,7	4,5	—	—	15	0,007	55
BFGC3 112 M 48	1,5	2	700	4,7	75	75,5	71	0,63	0,55	0,44	3,0	1,8	4,0	0,48	1,2	20	0,013	60
BFGC3 132 S 28	2,2	3	700	6,2	79	79	76,5	0,68	0,62	0,48	3,5	2,4	3,8	0,65	1,1	30	0,035	80
BFGC3 132 M 48	3	4	700	8,0	80,5	81,5	80	0,70	0,63	0,50	3,1	2,3	4,0	0,62	1,2	41	0,045	92
BFGC3 160 M 28	4	5,5	715	10,5	80,0	80	77,5	0,72	0,67	0,54	2,3	2,0	4,1	0,54	1,2	53	0,067	135
BFGC3 160 M 48	5,5	7,5	715	13,5	82,5	83,5	82	0,75	0,69	0,57	2,2	2,0	4,4	0,54	1,3	73	0,092	140
BFGC3 160 L 68	7,5	10	710	18	84,0	84,5	84	0,75	0,63	0,57	3,2	2,4	4,4	0,65	1,3	100	0,11	165
BFGC3 180 L 48	11	15	715	25	87,0	88,5	83	0,78	0,74	0,57	1,8	1,7	4,0	0,46	1,2	147	0,14	200
BFGC3 200 L 28	15	20	720	35	88,5	89	88	0,74	0,69	0,58	2,1	2,0	4,5	0,53	1,3	198	0,25	260
BFGC3 225 S 28	18,5	25	725	45	88,5	89,5	88,5	0,71	0,66	0,54	2,0	1,8	4,5	0,49	1,3	244	0,28	350
BFGC3 225 M 48	22	30	725	55	89	89,5	88,5	0,72	0,64	0,55	2,0	1,8	4,5	0,48	1,3	290	0,34	400
BFGC4 250 M 48	30	40	735	65	90	89,5	87	0,77	0,73	0,62	2,5	1,7	4,8	0,51	1,4	387	1,0	450
BFGC4 280 SA 48	37	50	735	81	89,5	89	87	0,78	0,73	0,63	2,4	1,9	5,0	0,52	1,5	481	1,2	610
BFGC4 280 MA 68	45	60	730	93	90,5	90,5	89,5	0,80	0,77	0,69	2,0	1,6	4,4	0,45	1,3	589	1,4	630
BFGC4 315 SA 48	55	75	740	120	93	92,5	91,5	0,75	0,70	0,57	3,0	2	5,8	0,55	1,7	711	2,1	740
BFGC4 315 MA 68	75	100	735	156	93,5	93,5	92,5	0,78	0,73	0,60	2,7	2	5,6	0,50	1,7	975	2,6	830
BFGC3 315 MA 68	100	125	740	182	93	93	92,5	0,80	0,75	0,66	1,8	1,6	5,3	0,43	1,6	1162	4,8	1175
BFGC3 315 MA 88	110	150	740	224	94	93,5	93	0,80	0,75	0,66	2,0	1,6	5,3	0,43	1,6	1420	5,9	1250
BFGC3 315 MA 108	132	180	740	264	94	94	93,5	0,80	0,75	0,66	2,0	1,6	5,3	0,43	1,6	1704	6,8	1300
BFGC3 355 MA 48	150	200	745	280	95,5	95,5	95	0,85	0,83	0,76	2,2	1,7	5,5	0,46	1,6	1924	12,5	2000
BFGC3 355 MA 68	185	250	745	349	95	95	94	0,85	0,82	0,75	2,3	1,7	6,2	0,46	1,9	2373	15,0	2200
BFGC3 355 MA 88	220	300	745	420	95,5	96	95	0,83	0,82	0,76	2,8	1,5	6,3	0,41	1,9	2808	17,8	2400
BFGC3 400 LA 68	260	350	745	475	95	94,5	93	0,85	0,80	0,67	2,4	1,9	6,7	0,51	2,0	3335	28,5	3000
BFGC3 400 LA 88	290	400	745	550	95,5	95	95	0,83	0,80	0,73	2,0	1,7	6,5	0,46	2,0	3720	31,7	3200

T_s : Starting torque
T_n : Normal torque
I_s : Starting current
I_n : Normal current

CAPACITOR START/ CAPACITOR RUN

BF5 D Motors

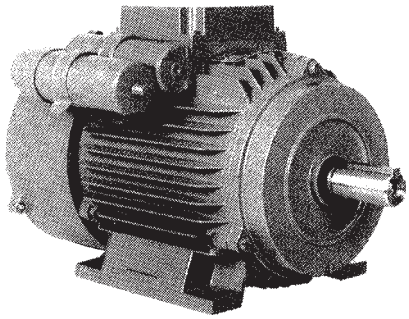

General Characteristics

- Dimensions according to IEC 72-1 (1990)
- Nominal and working performances according to IEC 34-1 (1983)
- Cooling ICO141 according to IEC 34-6 (1969)
- Mechanical protection IP 55 according to IEC 34-5 (1991)
- Mounting Forms (see dimensions) according to IEC 34-5 (1991)
- Aluminum frame and end shields high pressure die cast
- Class F insulation

ELECTRICAL DATA

MOTOR TYPE	RATING KW	SPEED rpm	In at 220 V A	EFFICIENCY %	cos ϕ	Tmax/Tn	Ts/Tn	Is/In	Tn Nm	MOMENT OF INERTIA Kgm2	CAPAC. µF	WEIGHT Kg
Synchronous Speed: 3000 RPM												
BF5D 80 M42	0.75	2920	5.0	72	0.95	2.2	1.8	5.1	2.4	0.00072	25 + 70	9.8
BF5D 90 S22	1.1	2930	6.8	74	0.99	2.4	1.6	6.2	3.5	0.00140	30 + 150	13.0
BF5D 90 L42	1.5	2920	8.8	82	0.95	2.4	1.8	6.3	4.9	0.00170	30 + 200	15.5
BF5D 100 L42	2.2	2915	12.5	80	0.99	2.1	1.7	5.9	7.3	0.00320	40 + 250	22.0
Synchronous Speed: 1500 RPM												
BF5D 80 M64	0.75	1430	4.8	70	0.99	1.8	1.7	4.6	4.9	0.00180	25 + 100	10.0
BF5D 90 L64	1.1	1430	6.6	75	0.99	1.8	1.8	5.1	7.3	0.00450	30 + 150	16.5
BF5D 90 L64	1.5	1420	10.0	72	0.95	1.8	1.7	4.1	9.8	0.00450	40 + 150	16.5
BF5D 100 L44	2.2	1450	14.0	78	0.92	2.2	1.9	5.2	14.7	0.00560	50 + 200	23.0

PERMANENT (RUN) CAPACITOR

BF5 C Motors

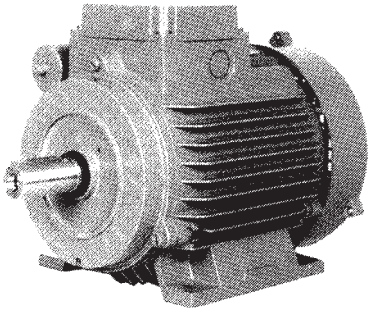

General Characteristics

- Dimensions according to IEC 72-1 (1990)
- Nominal and working performances according to IEC 34-1 (1983)
- Cooling ICO141 according to IEC 34-6 (1969)
- Mechanical protection IP 55 according to IEC 34-5 (1991)
- Mounting Forms (see dimensions) according to IEC 34-5 (1991)
- Aluminum frame and end shields high pressure die cast
- Class F insulation

ELECTRICAL DATA

MOTOR TYPE	RATING KW	SPEED rpm	In at 220 V A	EFFICIENCY %	cos ϕ	Tmax/Tn	Ts/Tn	Is/In	Tn Nm	MOMENT OF INERTIA Kgm2	CAPAC. µF	WEIGHT Kg
Synchronous Speed: 3000 RPM												
BF5C 71 M42	0.25	2845	1.9	60	0.99	2.1	0.79	3.5	0.85	0.00042	12	5.9
BF5C 71 M42	0.37	2800	2.6	66	0.97	1.9	0.72	3.1	1.25	0.00042	14	5.9
BF5C 71 M62	0.55	2790	3.9	67	0.97	2.1	0.50	3.0	1.90	0.00047	14	6.3
BF5C 80 M42	0.75	2810	5.3	68	0.94	1.9	0.66	3.1	2.60	0.00058	25	9.2
BF5C 90 S22	1.1	2800	7.2	69	0.99	1.8	0.53	3.3	3.80	0.00140	30	12.3
BF5C 90 L42	1.5	2745	10.5	70	0.94	1.6	0.59	3.0	5.20	0.00170	40	14.0
BF5C 100 L42	2.2	2710	13.5	76	0.97	1.8	0.59	2.9	7.80	0.00320	50	20.5
BF5C 112 M42	3.0	2830	17.5	80	0.98	2.3	0.58	4.7	10.0	0.00470	80	26.0
Synchronous Speed: 1500 RPM												
BF5C 71 M44	0.185	1425	1.5	56	0.99	1.9	0.79	2.6	1.25	0.00095	12	6.0
BF5C 71 M44	0.25	1420	2.0	58	0.99	1.7	0.78	2.8	1.70	0.00095	14	6.0
BF5C 71 M44	0.37	1385	3.1	54	0.99	1.7	0.75	2.1	2.60	0.00095	20	6.0
BF5C 80 M44	0.55	1405	3.9	65	0.99	1.7	0.66	2.7	3.70	0.00150	25	8.6
BF5C 80 M64	0.75	1375	5.2	66	0.99	1.6	0.64	2.4	5.20	0.00180	25	9.4
BF5C 90 L44	1.1	1375	7.5	68	0.94	1.6	0.63	2.8	7.60	0.00370	40	13.6
BF5C 90 L64	1.5	1385	10.5	70	0.92	1.6	0.50	2.9	10.3	0.00450	40	15.3
BF5C 100 L44	2.2	1400	15.5	75	0.87	2.0	0.50	1.7	15.0	0.00560	60	21.5
BF5C 112 M44	3.0	1430	20.0	76	0.91	2.0	0.50	4.0	20.0	0.00720	80	25.5
Synchronous Speed: 1000 RPM												
BF5C 71 M46	0.12	945	1.4	42	0.97	2.0	0.85	2.1	1.20	0.00095	10	6.0
BF5C 80 M46	0.185	970	1.8	52	0.85	2.2	0.55	3.0	1.77	0.00150	10	8.5
BF5C 80 M66	0.25	955	2.2	60	0.85	2.0	0.60	3.0	2.50	0.00180	12	9.2
BF5C 80 M66	0.37	930	2.7	63	0.99	1.6	0.57	2.5	3.80	0.00180	16	9.2
BF5C 90 L66	0.55	940	4.3	63	0.91	1.7	0.59	2.9	5.60	0.00450	25	15.0
BF5C 100 L46	0.75	975	5.8	68	0.86	2.4	0.60	3.9	7.40	0.00560	40	20.5
BF5C 112 M46	1.1	970	8.0	63	0.96	2.4	0.60	3.7	10.8	0.00720	60	25.5

STARTING CAPACITOR

BF5 M Motors

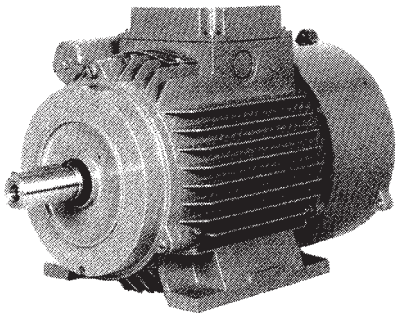

General Characteristics

- Dimensions according to IEC 72-1 (1990)
- Nominal and working performances according to IEC 34-1 (1983)
- Cooling ICO141 according to IEC 34-6 (1969)
- Mechanical protection IP 55 according to IEC 34-5 (1991)
- Mounting Forms (see dimensions) according to IEC 34-5 (1991)
- Aluminum frame and end shields high pressure die cast
- Class F insulation

ELECTRICAL DATA

MOTOR TYPE	RATING KW	SPEED rpm	In at 220 V A	EFFICIENCY %	cos ϕ	Tmax/Tn	Ts/Tn	Is/In	Tn Nm	MOMENT OF INERTIA Kgm2	CAPAC. µF	WEIGHT Kg
Synchronous Speed: 3000 RPM												
BF5M 80 M42	0.18	2900	1.7	59	0.82	2.0	3.0	6.3	0.6	0.00072	70	9.8
BF5M 80 M42	0.25	2900	2.5	63	0.72	2.0	2.3	5.3	0.8	0.00072	70	9.8
BF5M 80 M42	0.37	2910	3.3	68	0.75	2.3	2.5	5.6	1.2	0.00072	70	9.8
BF5M 80 M42	0.55	2870	4.7	66	0.81	1.8	2.4	5.0	1.8	0.00072	150	9.8
BF5M 90 S22	0.75	2930	6.7	67	0.77	2.2	1.8	5.1	2.4	0.00140	150	12.5
BF5M 90 L42	1.1	2920	9.2	71	0.76	2.2	2.0	5.7	3.6	0.00170	200	14.5
BF5M 100 L42	1.5	2925	12.0	70	0.80	2.8	2.0	5.9	4.8	0.00320	200	21.0
Synchronous Speed: 1500 RPM												
BF5M 80 M44	0.18	1460	2.6	51	0.61	2.5	3.4	4.6	1.2	0.0015	70	9.0
BF5M 80 M44	0.25	1450	3.3	51	0.72	1.7	2.3	4.0	1.6	0.0015	70	9.0
BF5M 80 M64	0.37	1420	3.9	55	0.77	1.7	1.8	3.7	2.5	0.0017	100	9.8
BF5M 90 S24	0.55	1430	6.0	59	0.76	1.8	2.4	4.0	3.7	0.0035	100	12.2
BF5M 90 L64	0.75	1420	7.3	62	0.76	1.7	2.4	4.0	4.8	0.0045	150	15.5
BF5M 100 L44	1.1	1440	9.8	67	0.77	1.7	2.4	4.2	7.3	0.0060	150	22.0
BF5M 100 L44	1.5	1440	13.5	69	0.74	1.8	2.0	3.9	9.7	0.0060	200	22.0

ELECTRICAL DATA

MOTORS WITH SHAFT HEIGHTS FROM 63 UP TO 112 MM — **380-415 V / 440-480 V, 50/60 HZ**

MOTOR TYPE	RATING kW 50 Hz/60Hz	SPEED rpm 50 Hz/60 Hz	I_n A	EFFICIENCY %			POWER FACTOR cos			$T_{max.}/T_n$	DIRECT STARTING		Y - Δ STARTING		T_n N.m	MOMENT OF INERTIA J kg/m²	WEIGHT kg
				4/4	3/4	2/4	4/4	3/4	2/4		T_S/T_n	I_S/I_n	T_S/T_n	I_S/I_n			
SYNCHRONOUS SPEED: 3000 rpm / 3600 rpm 2 POLE																	
BF7 63M22	0.18 / 0.22	2760 / 3315	0.6	64	—	—	0.72	—	—	—	2.4	3.7	—	—	0.6	0.00020	3.9
BF7 63M42	0.25 / 0.30	2770 / 3330	0.7	66	—	—	0.76	—	—	—	2.4	3.8	—	—	0.8	0.00023	4.3
BF7 71M22	0.37 / 0.44	2810/3375	0.9	70	71	68	0.82	0.74	0.61	2	2.1	5.3	—	—	1.3	0.00042	5.8
BF7 71M42	0.55 / 0.66	2815/3380	1.4	73	72	65	0.80	0.71	0.56	2.1	2	5	—	—	1.9	0.00042	5.8
BF5 80M42	0.75 / 0.90	2855/3425	1.7	77	77	74	0.83	0.75	0.61	2.5	2.6	6.1	—	—	2.5	0.00058	9
BF5 80M42	1.1 / 1.3	2825/3390	2.6	77	76	73	0.82	0.76	0.58	2.4	2.3	5.3	—	—	3.7	0.00058	9
BF5 90S22	1.5 / 1.8	2845/3415	3.3	80	80	79	0.86	0.81	0.70	2.4	2	6	—	—	5	0.0014	12
BF5 90L42	2.2 / 2.6	2845/3450	4.7	81	81	79	0.85	0.80	0.69	2.5	2.3	6.5	—	—	7.4	0.0017	14
BF5 100L42	3 / 3.6	2875/3450	6.3	83	82	80	0.86	0.80	0.68	3	2.6	7.1	0.73	2.1	10	0.0032	20
BF5 112M2	4 / 4.8	2875/3450	8.2	84	83	81	0.86	0.81	0.69	3	3.2	7.6	0.76	2.2	13.3	0.0041	24
SYNCHRONOUS SPEED: 1500 rpm / 1800 rpm 4 POLE																	
BF7 63M24	0.12 / 0.14	1360/1630	0.5	64	—	—	0.68	—	—	—	2.2	2.7	—	—	0.8	0.00028	3.9
BF7 63M44	0.18 / 0.22	1350/1620	0.7	56	—	—	0.68	—	—	—	2.2	2.7	—	—	1.2	0.00033	4.3
BF7 71M24	0.25 / 0.30	1385/1660	0.8	64	63	56	0.75	0.65	0.52	2.1	1.9	3.9	—	—	1.7	0.00095	5.8
BF7 71M44	0.37 / 0.44	1380/1655	1.2	65	61	52	0.72	0.62	0.47	2.2	2.0	3.7	—	—	2.6	0.00095	5.8
BF5 80M44	0.55 / 0.66	1390/1670	1.5	70	70	65	0.78	0.69	0.54	2.2	1.9	4.5	—	—	3.8	0.0015	8.5
BF5 80M44	0.75 / 0.90	1375/1650	2.0	70	70	66	0.81	0.72	0.54	2.1	1.8	4.1	—	—	5.3	0.0015	8.5
BF5 90S24	1.1 / 1.3	1380/1655	2.9	72	72	70	0.79	0.68	0.52	2.1	2	4.3	—	—	7.7	0.0031	11.5
BF5 90L44	1.5 / 1.8	1380/1655	3.9	74	74	70	0.78	0.71	0.53	2.3	2.2	4.5	—	—	10.4	0.0037	13.5
BF5 100L24	2.2 / 2.6	1395/1675	5.3	79	79	78	0.79	0.72	0.56	2	1.8	4.7	—	—	15	0.0045	18
BF5 100L44	3 / 3.6	1400/1680	7.1	80	80	79	0.80	0.73	0.58	2.2	1.9	5.3	0.60	1.6	20.5	0.0056	21
BF5 112M44	4 / 4.8	1410/1690	9.1	82	82	81	0.78	0.73	0.59	2.3	2.3	5.5	0.54	1.7	27.1	0.0072	25

Ordering Example:
BF7 71M22 B3 0.37
B3 = Type Mount (B3 = Foot Mount, B5 = Flange Mount, B14 = Flange Mount)

Conversion of kW to HP, divide by 0.746.

56 frame motors available upon request.

MOTORS WITH SHAFT HEIGHTS FROM 63 UP TO 112 MM — **380-415 V / 440-480 V, 50/60 HZ**

MOTOR TYPE	RATING kW 50 Hz/60Hz	SPEED rpm 50 Hz/60 Hz	I_n A	EFFICIENCY %			POWER FACTOR cos			$T_{max.}/T_n$	DIRECT STARTING		Y - Δ STARTING		T_n N.m	MOMENT OF INERTIA J kg/m²	WEIGHT kg
				4/4	3/4	2/4	4/4	3/4	2/4		T_S/T_n	I_S/I_n	T_S/T_n	I_S/I_n			
SYNCHRONOUS SPEED: 1000 rpm / 1200 rpm 6 POLE																	
BF5 71M26	0.185 / 0.22	900/1030	0.9	48	41	35	0.67	0.62	0.50	2.4	1.9	2.6	—	—	1.9	0.00095	5.8
BF7 71M26	0.25 / 0.30	910/1090	1.1	55	52	43	0.67	0.59	0.49	2.4	2	2.9	—	—	2.6	0.00095	5.8
BF5 80M46	0.37 / 0.44	925/1110	1.3	65	63	54	0.67	0.58	0.46	2.5	2.1	3.5	—	—	3.8	0.0015	8.5
BF5 80M66	0.55 / 0.66	905/1085	1.9	64	63	53	0.71	0.63	0.47	2.3	2.1	3.4	—	—	5.8	0.0018	9
BF5 90S26	0.75 / 0.90	875/1050	2.4	68	68	64	0.72	0.62	0.48	2	1.8	3.5	—	—	8.2	0.0031	11.5
BF5 90L66	1.1 / 1.3	880/1055	3.3	70	69	65	0.71	0.61	0.48	2	2.2	3.3	—	—	11.8	0.0045	15
BF5 100L46	1.5 / 1.8	920/1105	4.3	75	76	73	0.71	0.63	0.50	2.1	1.9	4	—	—	15.5	0.0056	21
BF5 112M46	2.2 / 2.6	925/1110	6	76	77	75	0.72	0.66	0.51	2	1.9	4	—	—	22.6	0.0072	25
SYNCHRONOUS SPEED: 750 rpm / 900 rpm 8 POLE																	
BF5 71M28	0.12/ 0.14	670/805	0.8	33	28	25	0.69	0.62	0.57	2.2	1.8	2.1	—	—	1.7	0.00095	5.8
BF5 80M48	0.185/ 0.22	680/815	1	47	40	33	0.65	0.58	0.50	2.2	1.6	2.4	—	—	2.6	0.0015	8.5
BF5 80M68	0.25/ 0.30	680/815	1.2	50	43	36	0.63	0.56	0.48	2.5	2	2.6	—	—	3.5	0.0019	9
BF5 90S28	0.37/ 0.44	660/790	1.6	56	55	47	0.63	0.55	0.46	2	1.8	2.5	—	—	5.4	0.0031	11.5
BF5 90L68	0.55/ 0.66	675/810	2.5	61	60	50	0.57	0.50	0.40	2.5	2.3	2.8	—	—	7.8	0.0045	15
BF5 100L48	0.75/ 0.90	695/835	2.9	70	66	60	0.59	0.51	0.40	2.1	1.7	3.2	—	—	10.3	0.0056	21
BF5 100L48	1.1/ 1.3	685/820	4.2	70	67	61	0.57	0.49	0.37	2.2	1.9	3.3	—	—	15.3	0.0056	21
BF5 112M48	1.5 / 1.8	680/815	5	70	69	65	0.65	0.55	0.46	1.7	1.6	3	—	—	21	0.0072	25

Ordering Example:
BF7 71M26 B3 0.185
B3 = Type Mount (B3 = Foot Mount, B5 = Flange Mount, B14 = Flange Mount)

Conversion of kW to HP, divide by 0.746.

56 frame motors available upon request.

MOTORS WITH SHAFT HEIGHTS FROM 132 UP TO 225 MM **380-415 V / 440-480 V, 50/60 HZ**

MOTOR TYPE	RATING kW 50 Hz/60Hz	SPEED rpm 50 Hz/60 Hz	I_n A	EFFICIENCY %			POWER FACTOR cos			$T_{max.}/T_n$	DIRECT STARTING		Y - Δ STARTING		T_n N.m	MOMENT OF INERTIA J kg/m²	WEIGHT kg
				4/4	3/4	2/4	4/4	3/4	2/4		T_S/T_n	I_S/I_n	T_S/T_n	I_S/I_n			
SYNCHRONOUS SPEED: 3000 rpm / 3600 rpm 2 POLE																	
BF5 132S42	5.5 / 6.6	2885/3460	11	85	85	84	0.89	0.87	0.79	2.9	2.5	7.5	0.78	2.3	18.1	0.012	39
BF5 132S62	7.5 / 9	2890/3465	14.6	86	86	85	0.90	0.88	0.80	2.8	2.8	7.8	0.76	2.4	24.8	0.014	45
BF5 160M22	11 / 13.2	2915/3500	21.5	88	88	87	0.86	0.83	0.75	2.4	2.2	6.5	0.60	2.1	36	0.024	65
BF5 160M42	15 / 18	2920/3505	29	89	90	89	0.85	0.81	0.72	2.3	2.2	7	0.70	2.2	49	0.027	70
BF5 160L62	18.5 / 22.2	2915/3500	34.5	91	91	90	0.89	0.85	0.78	2.4	2.2	7.5	0.61	2.2	61	0.035	83
BF5 180M42	22	2910	40	89.5	89.5	88	0.93	0.93	0.90	2.7	2.7	7.8	0.73	2.4	72	0.075	120
BF5 200L62	30	2935	56	91.5	91.5	90	0.89	0.89	0.86	2.4	2.3	6.9	0.62	2.1	98	0.115	149
BF5 200L82	37	2935	68.5	92.5	92.5	91.5	0.89	0.90	0.87	2.3	2.5	7.1	0.68	1.9	120	0.145	185
BF5 225M42	45	2940	82.5	93	92.5	91.5	0.89	0.88	0.84	2.6	2.5	7.8	0.70	2.4	146	0.155	195
SYNCHRONOUS SPEED: 1500 rpm / 1800 rpm 4 POLE																	
BF5 132S44	5.5 / 6.6	1435/1720	12.8	82	82	80	0.78	0.73	0.57	2.6	1.9	5.5	0.51	1.6	36.5	0.014	38
BF5 132M84	7.5 / 9	1435/1720	16.5	83.5	83	82	0.81	0.75	0.59	2.5	2	5.7	0.54	1.7	50	0.019	45
BF5 160M44	11 / 13.2	1440/1730	23.5	87	88	87	0.81	0.76	0.65	2.1	2.1	5.7	0.62	1.7	73 m	0.038	69
BF5 160L64	15 / 18	1445/1735	32.5	88	88	87	0.80	0.75	0.63	2.6	2.9	6.8	0.75	2	99.5	0.047	81
BF5 180M44	18.5	1465	35	90	90	89	0.88	0.84	0.75	2.7	2.5	7	0.68	2.1	121	0.105	113
BF5 180L64	22	1460	42	90	90.5	90	0.88	0.85	0.78	2.5	2.1	6.9	0.56	2.1	144	0.115	125
BF5 200L64	30	1470	59	91	90.0	89	0.85	0.83	0.74	2.8	2.3	6.9	0.63	2.1	195	0.150	160
BF5 225S24	37	1470	73	92	91.5	90	0.84	0.82	0.73	3.1	2.9	7.3	0.76	2.2	240	0.176	183
BF5 225M44	45	1465	85	92	91.5	91	0.88	0.85	0.76	2.7	2.7	7.1	0.73	2.2	294	0.200	195

Conversion of kW to HP, divide by 0.746.

Ordering Example:
BF5 132S42 B3 5.5
B3 = Type Mount (B3 = Foot Mount, B5 = Flange Mount, B14 = Flange Mount)

MOTORS WITH SHAFT HEIGHTS FROM 132 UP TO 225 MM **380-415 V / 440-480 V, 50/60 HZ**

MOTOR TYPE	RATING kW 50 Hz/60Hz	SPEED rpm 50 Hz/60 Hz	I_n A	EFFICIENCY %			POWER FACTOR cos			$T_{max.}/T_n$	DIRECT STARTING		Y - Δ STARTING		T_n N.m	MOMENT OF INERTIA J kg/m²	WEIGHT kg
				4/4	3/4	2/4	4/4	3/4	2/4		T_S/T_n	I_S/I_n	T_S/T_n	I_S/I_n			
SYNCHRONOUS SPEED: 1000 rpm / 1200 rpm 6 POLE																	
BF5 132S86	3 / 3.6	950/1140	6.5	81	82	80	0.80	0.76	0.62	2.2	1.5	4.7	0.43	1.4	30.2	0.0294	44
BF5 132M86	4 / 4.8	950/1140	9.7	80	80	76	0.75	0.68	0.55	2.5	1.7	5	0.50	1.5	40.2	0.0294	44
BF5 132M86	5.5 / 6.6	935/1120	13	81	81	78	0.77	0.68	0.57	2.2	1.8	5.4	0.50	1.7	56.3	0.030	49
BF5 160M66	7.5 / 9	960/1150	16.5	86	87	85.5	0.77	0.72	0.58	2.3	2.2	5.2	0.60	1.6	74.6	0.070	75
BF5 160L66	11 / 13.2	955/1145	25	87	88	87	0.78	0.71	0.60	2	2.1	5	0.55	1.5	110	0.070	77
BF5 180L46	15	970	32.5	88	88.5	87.5	0.80	0.76	0.64	2.4	2.4	5.5	0.65	1.7	148	0.150	123
BF5 200L26	18.5	975	39.5	89	89.5	89	0.80	0.78	0.68	2.4	2.4	5.5	0.65	1.7	180	0.195	125
BF5 200L46	22	970	46	90	90.5	89.5	0.82	0.79	0.70	2.3	2.5	5.6	0.68	1.7	216	0.220	140
BF5 225M46	30	975	62.5	90	90	88.5	0.81	0.78	0.67	2.7	3.3	6.6	0.89	2	293	0.300	180
SYNCHRONOUS SPEED: 750 rpm / 900 rpm 8 POLE																	
BF5 132S88	2.2 / 2.6	700/840	6.1	76	76.5	72	0.70	0.65	0.50	2.3	2	4	—	—	30	0.029	44
BF5 132M88	3 / 3.6	700/840	8	78	77	75	0.70	0.64	0.50	2	1.5	4	0.44	1.2	41	0.030	44
BF5 160M68	4 / 4.8	720/865	10	81	82	81	0.74	0.67	0.55	3	2.8	5.3	0.76	1.6	53	0.109	80
BF5 160M68	5.5 / 6.6	710/850	14	82	83	82	0.72	0.65	0.53	2.2	2	4	0.54	1.3	74	0.109	80
BF5 160L68	7.5 / 9	700/840	18	82.5	84	83	0.76	0.70	0.59	2	1.9	4.3	0.46	1.3	102	0.11	81
BF5 180L48	11	715	26	84.5	86	85.5	0.76	0.72	0.59	2.1	1.9	4.2	0.51	1.3	147	0.150	115
BF5 200L48	15	725	34.5	88	88.5	87	0.75	0.69	0.57	2.4	2.2	5.3	0.57	1.6	196	0.220	140
BF5 225S28	18.5	725	40.5	88.5	89	88.5	0.78	0.73	0.62	2.2	1.9	5	0.51	1.5	244	0.255	170
BF5 225M48	22	725	48.5	89	89.5	88	0.78	0.73	0.61	2.3	2.1	5.3	0.57	1.6	289	0.290	180

Ordering Example:
BF5 132S86 B3 3.0
B3 = Type Mount (B3 = Foot Mount, B5 = Flange Mount, B14 = Flange Mount)

Conversion of kW to HP, divide by 0.746.

Sizes 250 and above available upon request.

Stainless Steel Wash-Down Motors
High Efficiency Three Phase Asynchronous
NEMA and IEC Standards

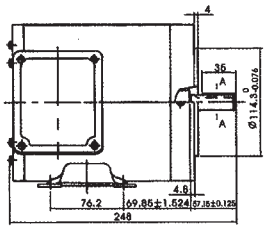

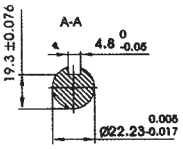

56C(TENV)
H90

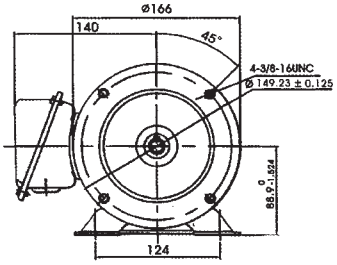

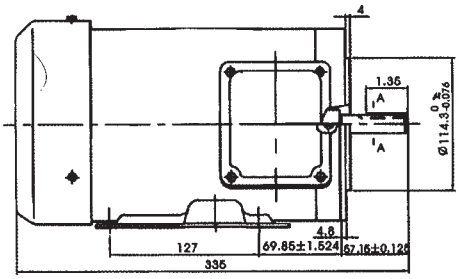

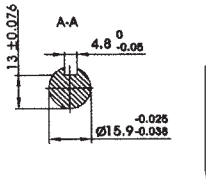

56C(TEFC)
H90

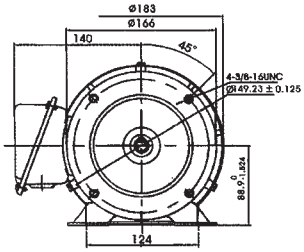

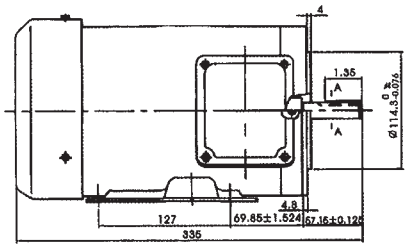

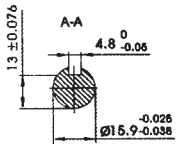

145TC(TEFC)
H90

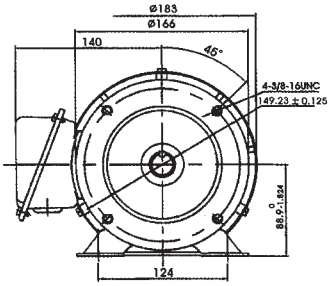

Ametric® Part Number	Output (HP)	Voltage (V)	Freq (Hz)	Speed (A)	Speed (r/min)	Eff (%)	Power Factor	Start Torque	Start Current	Max Torque	Motor Frame
WD 56A4	1/4	208-230/460	60	0.45	1750	78	0.68	3	9	4	
WD 56B4	1/3	208-230/460	60	0.55	1750	79	0.68	3	9	4	NEMA
WD 56C4	1/2	208-230/460	60	0.85	1750	80	0.71	2.6	7	4	56C
WD 56D4	3/4	208-230/460	60	1.15	1750	81.5	0.76	3	8	3.5	TEFC
WD 56E4	1	208-230/460	60	1.5	1750	82.5	0.78	3.3	9	4	IEC 90
WD 56F4	1-1/2	208-230/460	60	2.30	1750	84	0.74	2.8	8	4	
WD 56G4	2	208-230/460	60	2.85	1750	84	0.78	3.3	8	3	
WD 56E4-B	1	208-230/460	60	1.50	1750	82.5	0.78	3.3	9	4	NEMA
WD 56F4-B	1-1/2	208-230/460	60	2.30	1750	84	0.74	2.8	8	4	145TC
WD 56G4-B	2	208-230/460	60	2.85	1750	84	0.78	3.3	8	3	TEFC
WD 56G4-C	3	208-230/460	60	3.86	1750	87.5	0.78	3.3	8	4	IEC 90

Note: IEC (European) Standard motors = 50Hz 220-240/440

Ametric® Wash-Down Motors have totally stainless steel enclosures designed with TENV 3 mounting for C-Type Flange and Feet.

Motors are highly efficient, conforming to NRMA (1 HP and up). EPACT efficiency compliant. IEC Standard also available.

Ametric® Stainless Steel Wash-Down Motors (without coating) are widely used in the medical, pharmacy and food industry.

5.7 MOTOR BASES

- **Constructed in galvanized steel**
- **Easy to fix**
- **Constant alignment**
- **Suitable for any motor type**
- **Motor adjustment always possible**
- **Wide adjustment always possible**
- **Special lengths made to order in minimum quanities of 100**
- **Adjustable by spanner**
- **Suitable for all electric motors, speed reducers, and general machines**
- **5 sizes**
- **Adjustable without moving the motor bolts**
- **Highly reduced height dimensions**

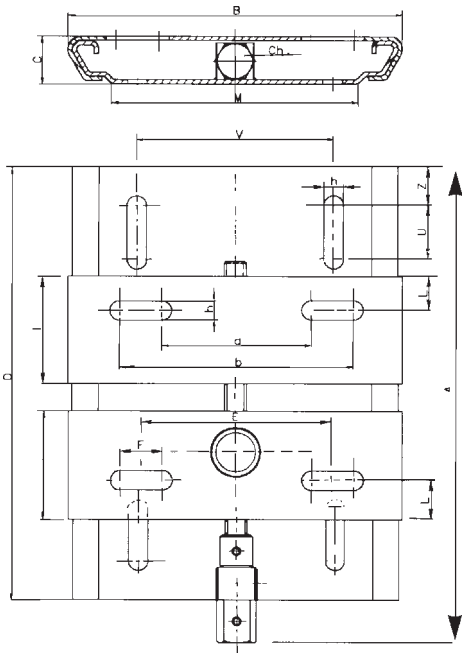

Motor Base Type	Motor Size	56M	63M	71M	80M	90S	90L	100L	112M	132S	132M	160M	160L	180M	180L
ATC 80	Maximum Adjustment (mm) Course Maximum (mm)	98	88	76	63										
ATC 90				118	105	90	90								
ATC 112					169	154	154	134	105						
ATC 132						208	208	188	158	132	132				
ATC 180												176	176	151	151

Motor Base Type	Electric Motor Size	Electric Motor Power 2 Poles (2800/min) (HP)	Electric Motor Power 4 Poles (1400/min) (HP)	A	B	C	D	E	F	I	L	M	Ch	V	Z	U	axbxh	Weight kg
ATC 80	56 - 80	0.12-2	0.12-1.3	240	154	22	220	85	25	50	16	113.5	15	90	25	40	60x110x9	1.5
ATC 90	71 - 90	0.5-3	0.7-2.5	293	180	25	270	90	45	70	20	134	16	110	25	40	45x135x9	2
ATC 112	80 - 112	2-7.5	1.3-5.5	365	220	30	340	110	43.5	85	23	163	17	130	25	50	66.5x153.5x13	3.5
ATC 132	90 - 132	3-15	2.5-12.5	430	250	35	400	134	47.5	100	26	184.5	22	150	25	60	86.5x181.5x13	5.8
ATC 180	160 - 180	15-30	20-30	532	380	40	500	220	60	125	35	305	24	260	25	60	160x280x15	12

MOTOR BASES

The Type ATX motor bases (made of galvanized steel), are an economical and optimal solution in the variable speed systems made with variable speed pulley in which the axial displacement of the electric motor allows a continuous speed variation of the driven shaft.

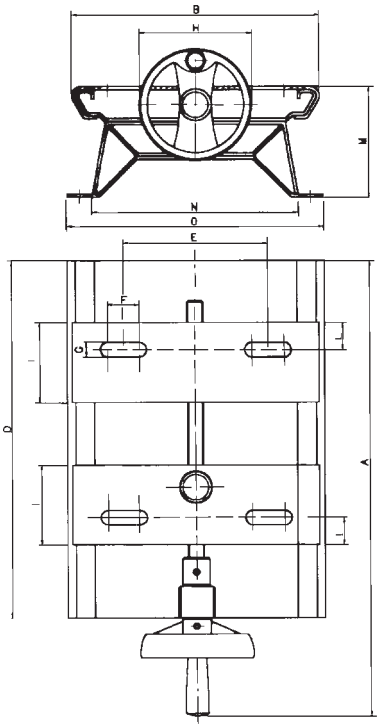

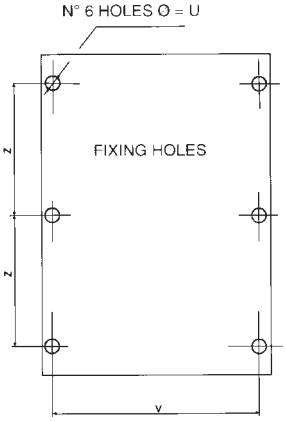

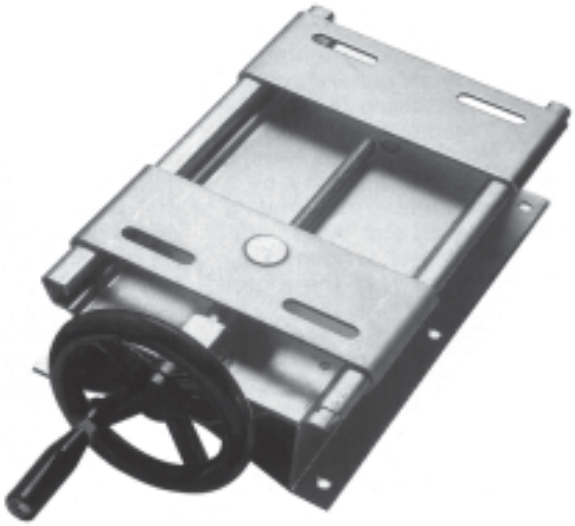

Motor Base Type	Motor Size	56M	63M	71M	80M	90S	90L	100L	112M	132S	132M
ATX XS	Maximum Adjustment (mm) Course Maximum (mm)	98	88	76	63						
ATX S				118	105	90	90				
ATX M						208	208	188	158	132	132

Motor Base Type	Electric Motor Size	Electric Motor Power 2 Poles (HP)	Electric Motor Power 4 Poles (HP)	A	B	D	E	F	G	H	I	L	M	N	O	U	V	Z	Weight kg
ATX XS	56 - 80	0.12-2	0.12-1.3	323	158	220	85	25	9	100	50	16	73	116	160	8.5	134	95	2.8
ATX S	71 - 90	0.5-3	0.7-2.5	394	182	270	90	45	9	120	70	20	90	140	184	8.5	164	110	4
ATX M	90 - 132	3-15	2.5-12.5	545	250	400	134	47	13	156	100	26	110	192	248	10.5	220	180	10

MOTOR BASES

The Type ATT motor bases (made of galvanized steel) allows the mounting and adjustment of all types of electric motors in almost all positions. In case of mounting upside-down, please consult our Special Products Department.

The very strong construction of the Type ATT motor bases and the special fixing elements allow all types of combinations by positioning of the adjusting threaded elements.

The mounting of the electric motors is made easy by a reduced number of standard components and by the correct keeping of position of the fixing element in the motor base.

The Type ATT motor bases may be fixed to their basement by means of bolts as well as by welding when the basement is steel made.

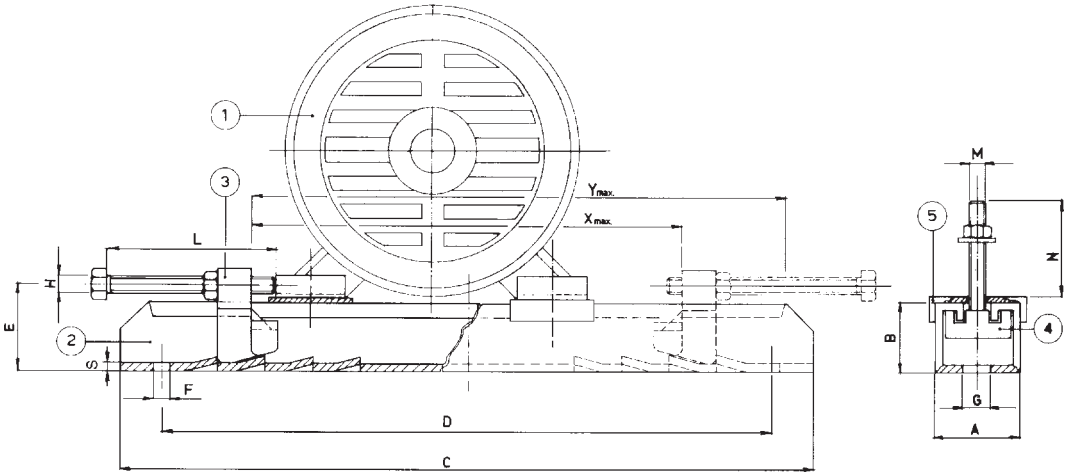

5	Plate
4	Motor Fixing Bolt
3	Slidable Push Button
2	Rail
1	Motor

Motor Base Type	Electric Motor Size	A	B	C	D	E	F	G	H	L	M	N	X max.	Y max.	S	Weight kg
ATT71/6	63 - 80	51	31	312	280	38	13	18	M8	80	M6	25	180	220	2.5	2.7
ATT80/8	80	51	31	375	343	38	13	18	M8	80	M8	30	240	280	2.5	3.1
ATT90/8	80 - 90	61	36	395	355	45	13	21	M10	100	M8	30	245	300	3	4.8
ATT100/10	100	61	36	395	355	45	13	21	M10	100	M10	35	245	300	3	4.9
ATT112/10	100 - 112	61	36	495	455	45	13	21	M10	100	M10	35	345	400	3	5.6
ATT132/10	100 - 132	65	40	530	480	52	17	26	M12	120	M10	45	360	420	3.5	7.8
ATT160/12	160	65	40	630	580	52	17	26	M12	120	M12	50	460	520	3.5	8.8
ATT180/12	160 -180	75	42	700	630	57	17	26	M12	120	M12	50	520	580	4	12
ATT225/16	200 - 225	82	50	864	800	68	17	27	M16	140	M16	65	670	740	5	20.4
ATT280/20	250 - 280	116	68	1072	1000	88	17	27	M18	150	M20	80	870	940	6	43
ATT355/24	315 - 355	116	68	1330	1250	88	17	27	M18	150	M24	100	1130	1200	6	52

VARIATORS

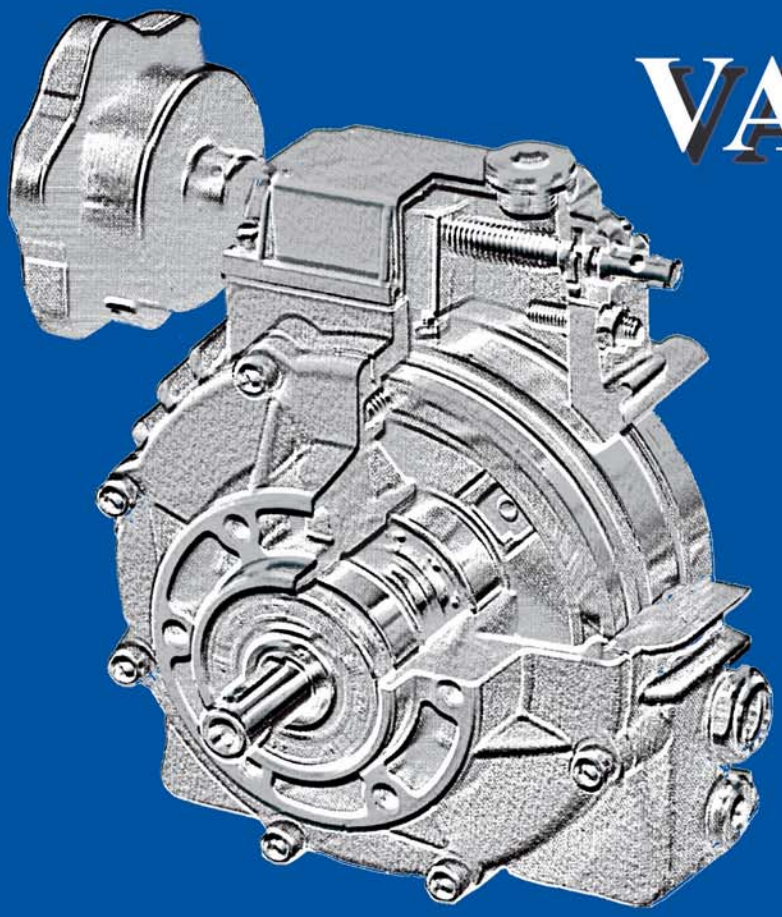

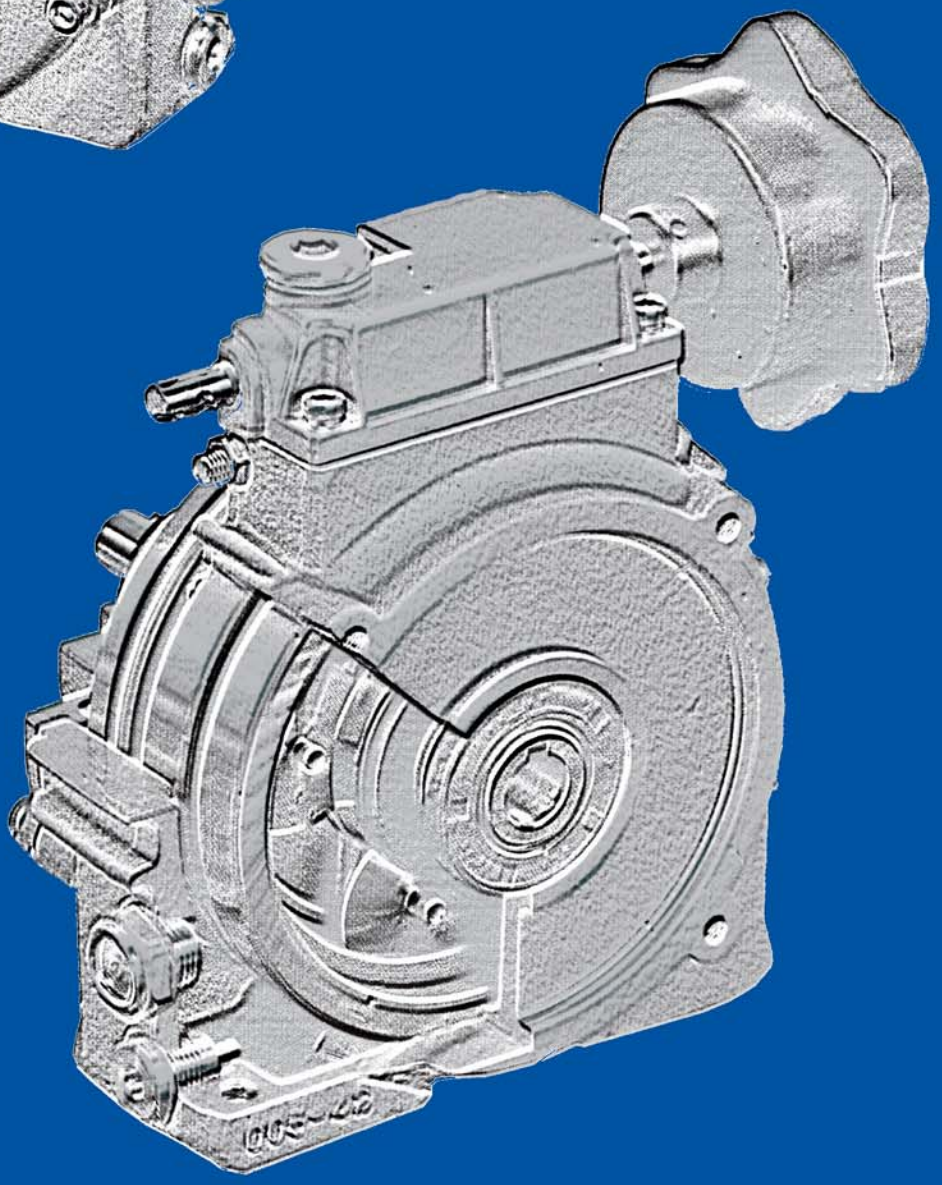

6.0 VARIATORS

The Series N mechanical variators consist of sizes 003, 005, 010 and 020 with power ranges of 0.18 kW to 1.5 kW are constructed from aluminum. Larger sizes are made from cast iron.

FEATURES

1. Aluminum construction of housing benefits weight reduction for more convenient applications and transportation.
2. The simple design allows both foot or flange mounting to standard unit, reducing stocking levels and allowing quick delivery.
3. The closed input flange is an integral part of the variator casing for easy installation and prevents possibility of oil leaks.
4. IEC B5 motor connections available as standard.
5. The magnetic breather plug maintains clean lubricant and extends maintenance intervals.
6. The oil bath operation provides high efficiency for noiseless, vibration-free running.
7. The unit can operate in both directions, input and output shafts rotate in same direction.
8. Range of variation = 6 : 1 reduction.
9. Hand wheel can be fitted to both sides of control box for convenient installation.

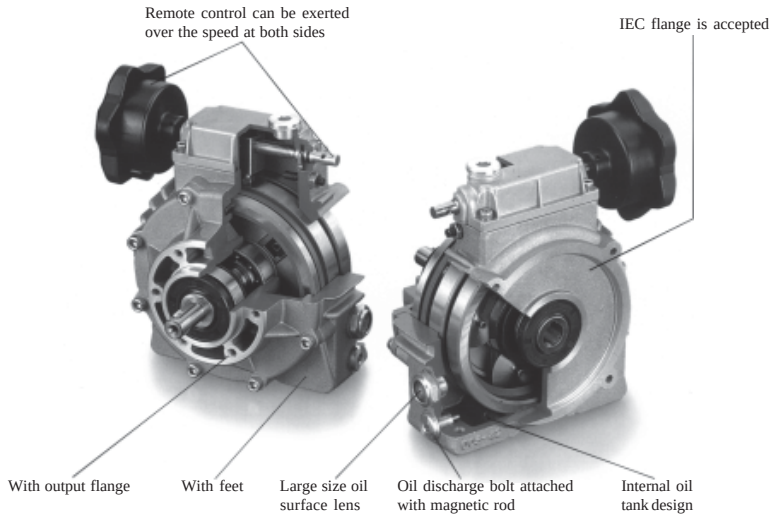

6.1 OPERATING PRINCIPLE

The mechanical variator is based on an epicyclic transmission for variable ratios. The motor rotates the solar rings (5-6) which rotate the satellites (8). In turn, these are in contact with the fixed outer ring (7) and external mobile ring (9). The satellites rotate around their axes while simultaneously originate the rotation of the satellite carrier (output shaft). When the rolling contact point of the outer rings (7) (9) is near the center of satellites (8) the output speed will reduce: the output shaft will rotate more slowly thus increasing the output torque value.

WARNING

Speed adjustment is only possible when variator is running, never adjust speed while variator is stationary. This will result in damage to the variator.

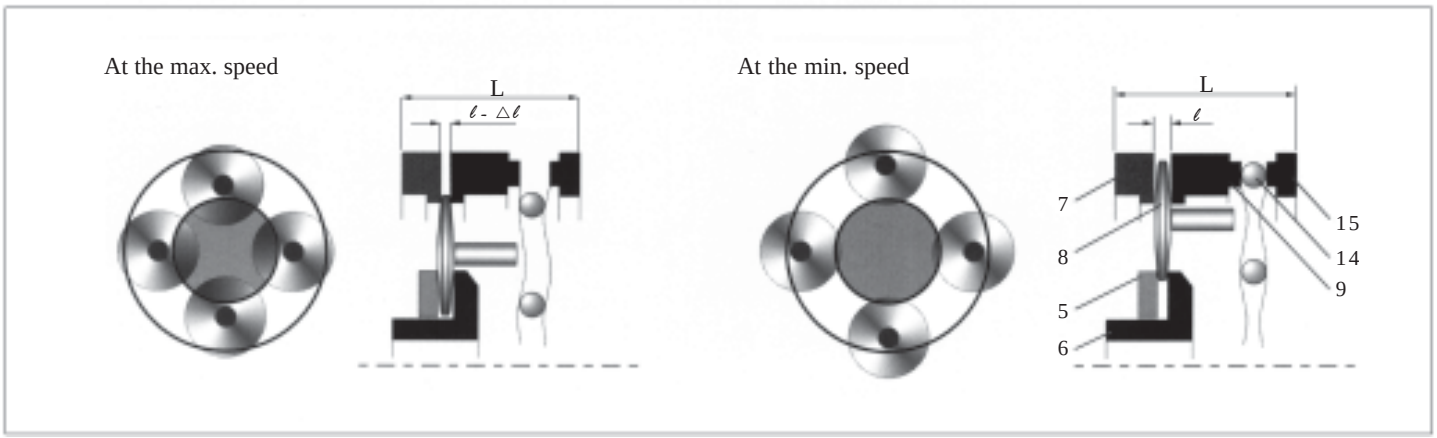

6.2 DESIGNATION

Type	Size	Output Shaft Diameter (mm)	Output Flange Diameter (mm)	IEC Motor Adaptor	Mounting Position	Speed Control Box Position	Motor Power	No. of Poles	Motor Version	Voltage	Frequency	Terminal Box Position
NF	**030**	**AU28**	**F250**	**100B5**	**B5**	**SA**	**2.2kW**	**4**	**B5**	**230/400**	**50Hz**	**MA**
N NM NF NK NMK NFK	003 005 010 020 030 050 075 100	See Tables	See Tables	See Tables	B3 B6 B7 B8 V5 V6 B5 V1 V3	SA SB SC SD	See Tables	2 4 6	B5			MA MB MC MD

Variator							Motor					
N												
NM												
NF												
NK												
NMK												
NFK												

The above table depicts details required for the designation of different products.

6.3 TECHNICAL DATA

Type	P_1 kW	Poles	IEC Motor Adaptor	n_2 max min^{-1}	n_2 min min^{-1}	T_2 min Nm	T_2 max Nm
N003	0.25	4	63 B5	950	190	1.9	3.8
	0.37	2	63 B5	1900	380	1.5	3
N005	0.37	4	71 B5	1000	167	3	6
	0.75	2	71 B5	2000	333	3	6
N010	0.75	4	80 B5	1000	167	6	12
	1.5	2	80 B5	2000	333	6	12
N020	1.5	4	90 B5	1000	167	12	24
	2.2	2	90 B5	2000	333	9	18
N030	2.2	6	100 B5	660	125	27	54
	2.2	4	100 B5	1000	167	18	36
N050	3.6	4	112 B5	1000	167	32	64
N075	5.5	6	132 B5	660	125	72	144
	5.5	4	132 B5	1000	190	43	86
N100	7.5	4	132 B5	1000	190	58	116

Symbols:

P_1 [kW]	Motor Power
poles	Number of Poles
n_2 max [min^{-1}]	Max output speed of variator
n_2 min [min^{-1}]	Min output speed of variator
T_2 min [Nm]	Min output torque
T_2 max [Nm]	Max output torque

The following diagrams show the performance for output torque in relation to input power and input speed n_1 (min^{-1}).

n_1 < 1500 min^{-1}

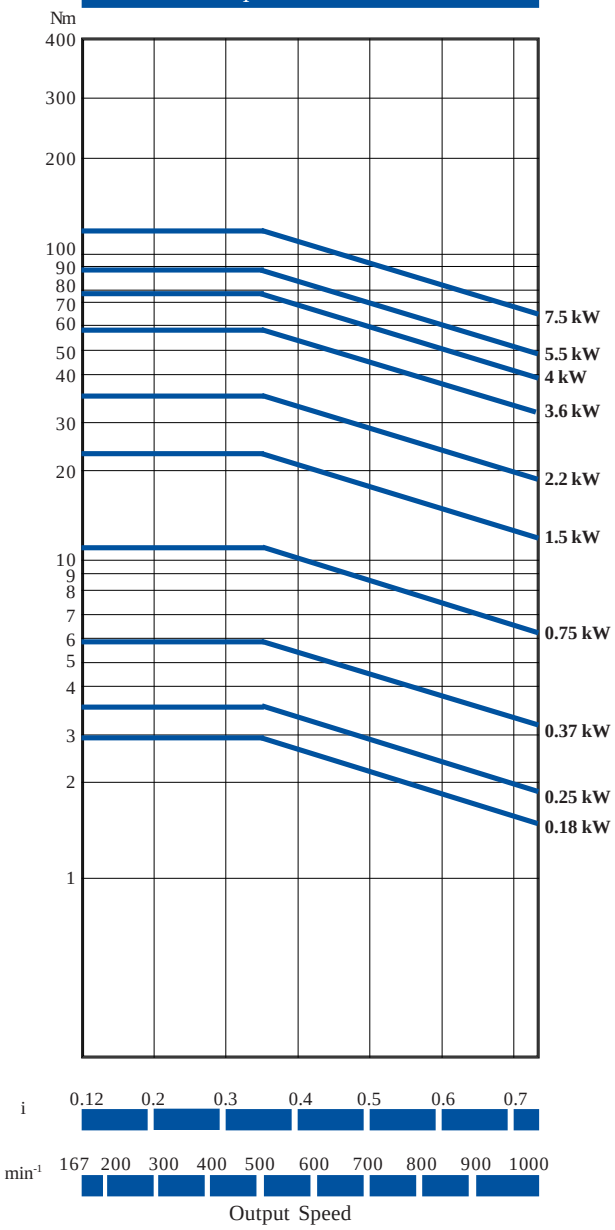

n_1 = 1500 - 1800 min^{-1}

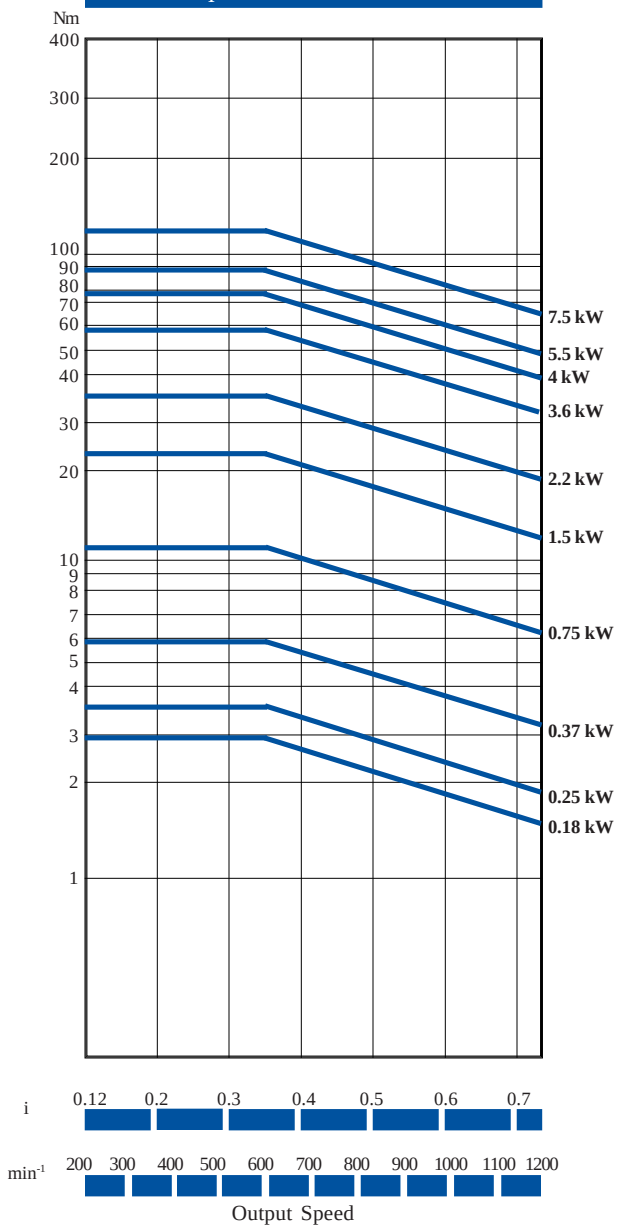

Diagram A shows the indicative value of efficiency in relation to output speed n_2 expressed in min^{-1}. Diagram B shows the percentage of motor output power utilized.

Diag. A

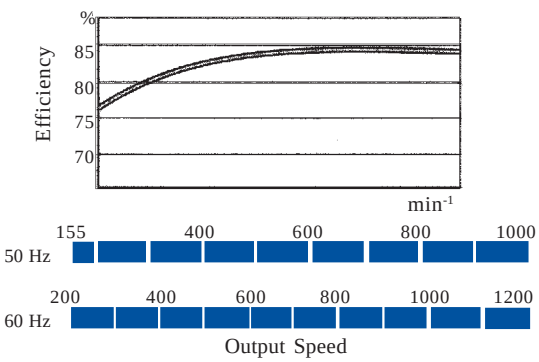

Diag. B

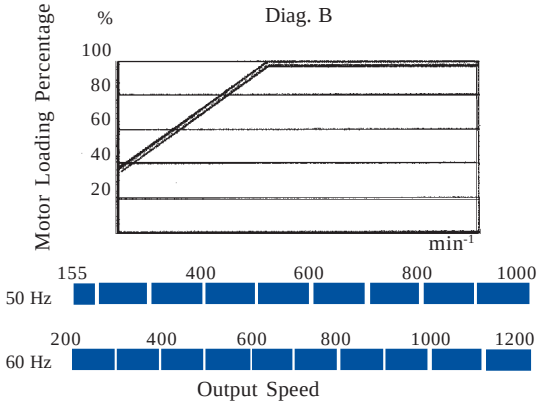

6.4 LUBRICATION

The variators are supplied complete with lubricant type IP DEXRON FLUID II. It is important to have the correct level of lubrication for the final mounting position chosen. Ensure the oil can be seen through the oil level plug to allow the filling up if necessary.

6.5 MOUNTING POSITIONS

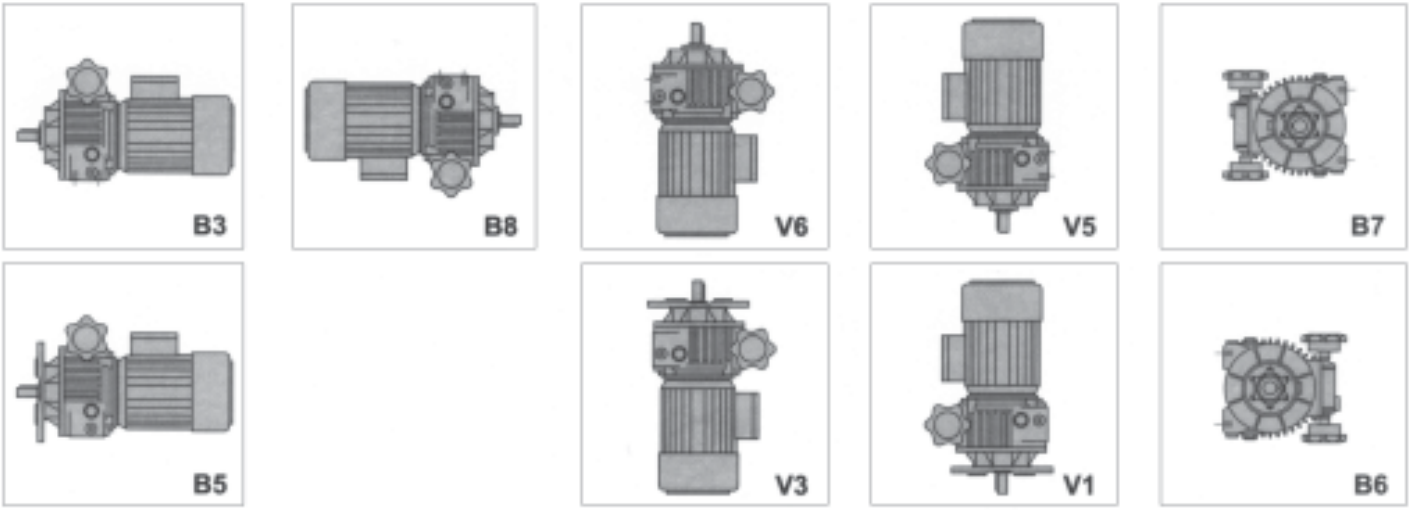

6.6 TERMINAL BOX AND SPEED CONTROL BOX POSITION

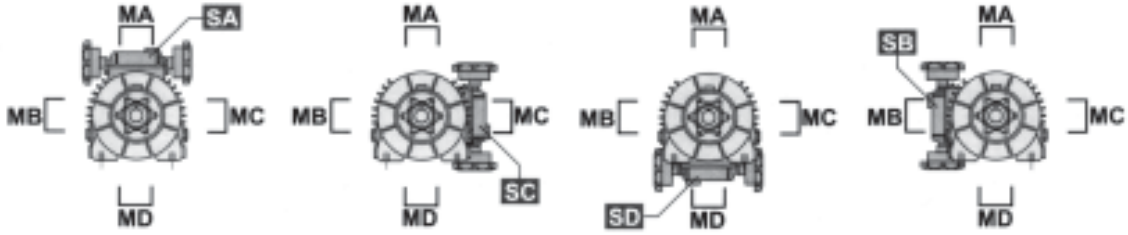

MA, MB, MC, MD
Terminal Box Position

SA, SB, SC, SD
Speed Control Box Position

6.7 DIMENSIONS

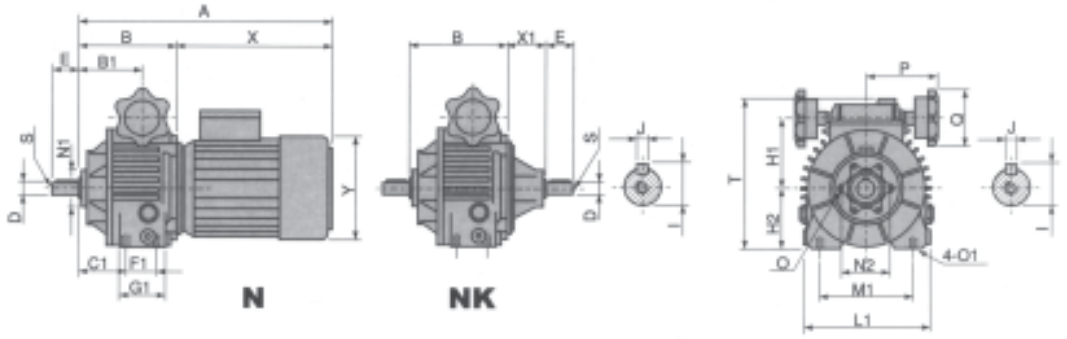

TYPE	A	B	B1	C1	D	E	F1	G1	H1	H2	I	J	L1	M1	N1	N2	O	O1	P	Q	S	T	X	X1	Y	Weight kg
N003	302	110	66	44	11	23	36	55	76	58	12.5	4	128	100	42	56	M6	M8	97	89	M5	160	192	42	122	5
N005	336	118	78	61	14	30	36	55	88	73	16	5	153	120	56	75	M6	M8	97	89	M6	185	218	50	137	7
N010	383	145	95	75	19	40	45	82	107	91	21.5	6	187	140	56	75	M6	M10	107	89	M6	222	239	65	158	13
N020	450	172	105	82	24	50	58	82	126	108	27	8	220	190	75	100	M8	M10	107	89	M8	264	278	70	177	20

SPEED VARIATORS

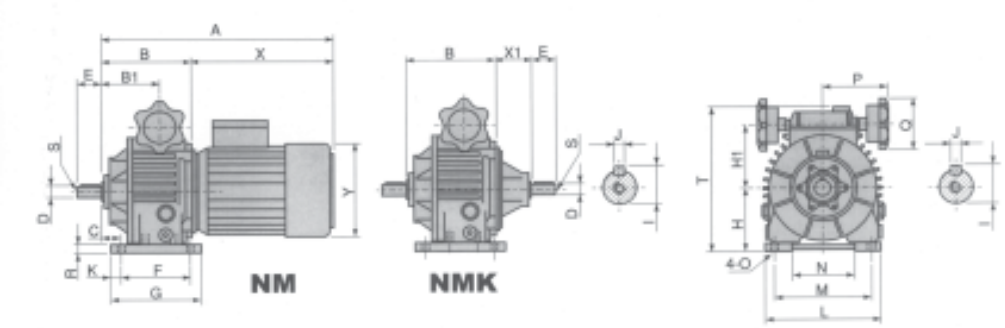

TYPE	A	B	B1	C	D	E	F	G	H	H1	I	J	K	L	M	N	O	P	Q	R	S	T	X	X1	Y	Weight kg
NM003	302	110	66	25	11 (14)	23	105	130	71	76	12.5 (16)	4 (5)	12.5	140	110	80	9	97	89	11	M5 (M6)	173	192	42	122	6
NM005	336	118	78	30	14 (19	30	105	130	90	88	16 (21.5)	5 (6)	12.5	155	120	83	10	97	89	13	M6	202	218	50	137	8
NM010	382	143	95	35	19 (24)	40	125	150	106	107	21.5 (27)	6 (8)	12.5	190	160	120	12	107	89	13.5	M6 (M8)	242	239	65	158	14
NM020	441	171	104	50	24 (28)	50	140	165	125	126	27 (31)	8	12.5	230	180	130	12	107	89	16	M8 (M10)	277	270	70	177	21
NM030/ 050	546	206	122	25	28 (38)	60	230	270	150	158	31 (41)	8 (10)	20	300	245	190	14	155	120	20	M10 (M12)	337	340	95	197	51
NM075/ 100	686	264	163	33	38 (42)	80	250	290	180	205	41 (45)	10 (12)	20	365	315	225	18	183	120	25	M12	415	402	110	253	88

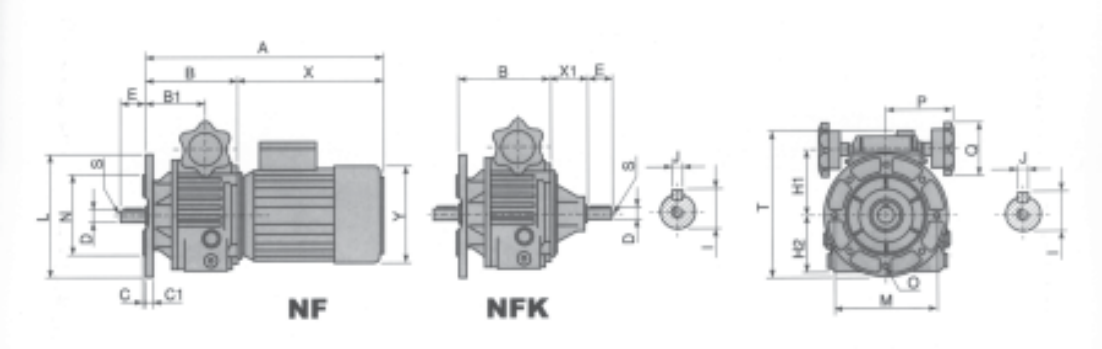

TYPE	A	B	B1	C	C1	D	E	H1	H2	I	J	L	M	N	O	P	Q	S	T	X	X1	Y	Weight kg
NF003	302	110	66	3.5	8	11 (14)	23	76	58	12.5 (16)	4 (5)	140 (160)	115 (130)	95 (110)	9 (9)	97	89	M5	165 (175)	192	42	122	6
NF005	338	120	80	3.5	10.5	14 (19	28	88	73	16 (21.5)	5 (6)	160 (200)	130 (165)	110 (130)	9 (11)	97	89	M6	188 (208)	218	50	137	8
NF010	384	145	97	3.5	13.5	19 (24)	38	107	91	21.5 (27)	6 (8)	200	165	130	11	107	89	M6 (M8)	237	239	65	158	14
NF020	443	173	106	4	14	24 (28)	48 (58)	126	108	27 (31)	8	200 (250)	165 (215)	130 (180)	11 (14)	107	89	M8 (M10)	260 (277)	270	70	177	21
NF030/050	548	208	124	4 (5)	16	28 (38)	58 (78)	158	134	31 (41)	8 (10)	250 (300)	215 (265)	180 (230)	14	155	120	M10 (M12)	336	340	95	197	51
NF075/100	668	266	165	5	18	38 (42)	78	205	165	41 (45)	10 (12)	300 (350)	265 (300)	230 (250)	14 (18)	183	120	M12	413	402	110	253	88

MOTOR - REDUCER - PUMP WORKSHEET

Completion of this sheet will help expedite your quote/order.

Company name and address:

Contact: _____

Customer Account No.: _____

Date: _____

Phone: _____

FAX: _____

Motor

Manufacture _____ Part Number _____

Country of Origin _____ Frame Size _____

KW (50 Hz/60 Hz) _____ HP (50 Hz/60 Hz) _____

RPM (50 Hz/60 Hz) _____ Number of Poles _____

Volts _____ Mounting: Foot Flange

Special Features _____

Notes:

Reducer

Manufacture _____ Part Number _____

Country of Origin _____ Reducer Type _____

Ratio _____ Reducer: Foot Flange

Input Speed _____ If input shaft, what is the diameter? _____

Output Speed _____ If hollow or output shaft, what is the diameter? _____

Notes:

Pump

Manufacture _____ Part Number _____

Country of Origin _____ Intake Diameter _____

Discharge Diameter _____ Liter/Minute _____

Gallon/Minute _____ Head/Minute _____

Head/Foot _____ Operating Conditions _____

What is being pumped? _____ Temperature of Liquid _____

Special Features _____

Notes:

Phone: (800) 967-5289 FAX: (864) 876-3516

METRIC CONVERSIONS

Fractions, Decimals, and Millimeters

Inches Fractions	Inches Decimals	mm	Inches Fractions	Inches Decimals	mm	Inches Fractions	Inches Decimals	mm	Inches Fractions	Inches Decimals	mm
–	0.0004	.01	25/32	0.7813	19.844	–	2.1654	55	3-11/16	3.6875	93.663
–	0.0039	.10	–	0.7874	20	2-3/16	2.1875	55.563	–	3.7008	94
–	0.0098	.25	51/64	0.7969	20.241	–	2.2047	56	3-23/32	3.7187	94.456
1/64	0.0156	.397	13/16	0.8125	20.638	2-7/32	2.2187	56.356	–	3.7402	95
–	0.0197	.50	–	0.8268	21	–	2.2441	57	3-3/4	3.7500	95.25
–	0.0295	.75	53/64	0.8281	21.034	2-1/4	2.2500	57.15	–	3.7795	96
1/32	0.0313	.794	27/32	0.8437	21.431	2-9/32	2.2813	57.944	3-25/32	3.7813	96.044
–	0.0394	1	55/64	0.8594	21.828	–	2.2835	58	3-13/16	3.8125	96.838
3/64	0.0469	1.191	–	0.8661	22	2-5/16	2.3125	58.738	–	3.8189	97
–	0.0591	1.5	7/8	0.8750	22.225	–	2.3228	59	3-27/32	3.8437	97.631
1/16	0.0625	1.588	57/64	0.8906	22.622	2-11/32	2.3437	59.531	–	3.8583	98
5/64	0.0781	1.984	–	0.9055	23	–	2.3622	60	3-7/8	3.8750	98.425
–	0.0787	2	29/32	0.9063	23.019	2-3/8	2.3750	60.325	–	3.8976	99
3/32	0.0937	2.381	59/64	0.9219	23.416	–	2.4016	61	3-29/32	3.9063	99.219
–	0.0984	2.5	15/16	0.9375	23.813	2-13/32	2.4063	61.119	–	3.9370	100
7/64	0.1094	2.778	–	0.9449	24	2-7/16	2.4375	61.913	3-15/16	3.9375	100.013
–	0.1181	3	61/64	0.9531	24.209	–	2.4409	62	3-31/32	3.9687	100.806
1/8	0.1250	3.175	31/32	0.9687	24.606	2-15/32	2.4687	62.706	–	3.9764	101
–	0.1378	3.5	–	0.9843	25	–	2.4803	63	4	4.0000	101.6
9/64	0.1406	3.572	63/64	0.9844	25.003	2-1/2	2.5000	63.5	4-1/16	4.0625	103.188
5/32	0.1563	3.969	1	1.0000	25.4	–	2.5197	64	4-1/8	4.1250	104.775
–	0.1575	4	–	1.0236	26	2-17/32	2.5313	64.294	–	4.1339	105
11/64	0.1719	4.366	1-1/32	1.0313	26.194	–	2.5591	65	4-3/16	4.1875	106.363
–	0.1772	4.5	1-1/16	1.0625	26.988	2-9/16	2.5625	65.088	4-1/4	4.2500	107.95
3/16	0.1875	4.763	–	1.0630	27	2-19/32	2.5937	65.881	4-5/16	4.3125	109.538
–	0.1969	5	1-3/32	1.0937	27.781	–	2.5984	66	–	4.3307	110
13/64	0.2031	5.159	–	1.1024	28	2-5/8	2.6250	66.675	4-3/8	4.3750	111.125
–	0.2165	5.5	1-1/8	1.1250	28.575	–	2.6378	67	4-7/16	4.4375	112.713
7/32	0.2187	5.556	–	1.1417	29	2-21/32	2.6563	67.469	4-1/2	4.5000	114.3
15/64	0.2344	5.953	1-5/32	1.1563	29.369	–	2.6772	68	–	4.5276	115
–	0.2362	6	–	1.1811	30	2-11/16	2.6875	68.263	4-9/16	4.5625	115.888
1/4	0.2500	6.35	1-3/16	1.1875	30.163	–	2.7165	69	4-5/8	4.6250	117.475
–	0.2559	6.5	1-7/32	1.2187	30.956	2-23/32	2.7187	69.056	4-11/16	4.6875	119.063
17/64	0.2656	6.747	–	1.2205	31	2-3/4	2.7500	69.850	–	4.7244	120
–	0.2756	7	1-1/4	1.2500	31.75	–	2.7559	70	4-3/4	4.7500	120.65
9/32	0.2813	7.144	–	1.2598	32	2-25/32	2.7813	70.6439	4-13/16	4.8125	122.238
–	0.2953	7.5	1-9/32	1.2813	32.544	–	2.7953	71	4-7/8	4.8750	123.825
19/64	0.2969	7.541	–	1.2992	33	2-13/16	2.8125	71.4376	–	4.9213	125
5/16	0.3125	7.938	1-5/16	1.3125	33.338	–	2.8346	72	4-15/16	4.9375	125.413
–	0.3150	8	–	1.3386	34	2-27/32	2.8438	72.2314	5	5.0000	127
21/64	0.3281	8.334	1-11/32	1.3437	34.131	–	2.8740	73	–	5.1181	130
–	0.3346	8.5	1-3/8	1.3750	34.925	2-7/8	2.8750	73.025	5-1/4	5.2500	133.35
11/32	0.3437	8.731	–	1.3780	35	2-29/32	2.9063	73.819	5-1/2	5.5000	139.7
–	0.3543	9	1-13/32	1.4063	35.719	–	2.9134	74	–	5.5118	140
23/64	0.3594	9.128	–	1.4173	36	2-15/16	2.9375	74.613	5-3/4	5.7500	146.05
–	0.3740	9.5	1-7/16	1.4375	36.513	–	2.9528	75	–	5.9055	150
3/8	0.3750	9.525	–	1.4567	37	2-31/32	2.9687	75.406	6	6.0000	152.4
25/64	0.3906	9.922	1-15/32	1.4687	37.306	–	2.9921	76	6-1/4	6.2500	158.75
–	0.3937	10	–	1.4961	38	3	3.0000	76.2	–	6.2992	160
13/32	0.4063	10.319	1-1/2	1.5000	38.1	3-1/32	3.0313	76.994	6-1/2	6.5000	165.1
–	0.4134	10.5	1-17/32	1.5313	38.894	–	3.0315	77	–	6.6929	170
27/64	0.4219	10.716	–	1.5354	39	3-1/16	3.0625	77.788	6-3/4	6.7500	171.45
–	0.4331	11	1-9/16	1.5625	39.688	–	3.0709	78	7	7.0000	177.8
7/16	0.4375	11.113	–	1.5748	40	3-3/32	3.0937	78.581	–	7.0866	180
29/64	0.4531	11.509	1-19/32	1.5937	40.481	–	3.1102	79	–	7.4803	190
15/32	0.4687	11.906	–	1.6142	41	3-1/8	3.1250	79.375	7-1/2	7.5000	190.5
–	0.4724	12	1-5/8	1.6250	41.275	–	3.1496	80	–	7.8740	200
31/64	0.4844	12.303	–	1.6535	42	3-5/32	3.1563	80.169	8	8.0000	203.2
–	0.4921	12.5	1-21/32	1.6563	42.069	3-3/16	3.1875	80.963	–	8.2677	210
1/2	0.5000	12.7	1-11/16	1.6875	42.863	–	3.1890	81	8-1/2	8.5000	215.9
–	0.5118	13	–	1.6929	43	3-7/32	3.2187	81.756	–	8.6614	220
33/64	0.5156	13.097	1-23/32	1.7187	43.656	–	3.2283	82	9	9.0000	228.6
17/32	0.5313	13.494	–	1.7323	44	3-1/4	3.2500	82.55	–	9.0551	230
35/64	0.5469	13.891	1-3/4	1.7500	44.45	–	3.2677	83	–	9.4488	240
–	0.5512	14	–	1.7717	45	3-9/32	3.2813	83.344	9-1/2	9.5000	241.3
9/16	0.5625	14.288	1-25/32	1.7813	45.244	–	3.3071	84	–	9.8425	250
–	0.5709	14.5	–	1.8110	46	3-5/16	3.3125	84.1377	10	10.0000	254.001
37/64	0.5781	14.684	1-13/16	1.8125	46.038	3-11/32	3.3438	84.9314	–	10.2362	260
–	0.5906	15	1-27/32	1.8437	46.831	–	3.3465	85	–	10.6299	270
19/32	0.5937	15.081	–	1.8504	47	3-3/8	3.3750	85.725	11	11.0000	279.401
39/64	0.6094	15.478	1-7/8	1.8750	47.625	–	3.3858	86	–	11.0236	280
5/8	0.6250	15.875	–	1.8898	48	3-13/32	3.4063	86.519	–	11.4173	290
–	0.6299	16	1-29/32	1.9063	48.419	–	3.4252	87	–	11.8110	300
41/64	0.6406	16.272	–	1.9291	49	3-7/16	3.4375	87.313	12	12.0000	304.801
–	0.6496	16.5	1-15/16	1.9375	49.213	–	3.4646	88	13	13.0000	330.201
21/32	0.6563	16.669	–	1.9685	50	3-15/32	3.4687	88.106	–	13.7795	350
–	0.6693	17	1-31/32	1.9687	50.006	3-1/2	3.5000	88.9	14	14.0000	355.601
43/64	0.6719	17.066	2	2.0000	50.8	–	3.5039	89	15	15.0000	381.001
11/16	0.6875	17.463	–	2.0079	51	3-17/32	3.5313	89.694	–	15.7480	400
45/64	0.7031	17.859	2-1/32	2.0313	51.594	–	3.5433	90	16	16.0000	406.401
–	0.7087	18	–	2.0472	52	3-9/16	3.5625	90.4877	17	17.0000	431.801
23/32	0.7187	18.256	2-1/16	2.0625	52.388	–	3.5827	91	–	17.7165	450
–	0.7283	18.5	–	2.0866	53	3-19/32	3.5937	91.281	18	18.0000	457.201
47/64	0.7344	18.653	2-3/32	2.0937	53.181	–	3.6220	92	19	19.0000	482.601
–	0.7480	19	2-1/8	2.1250	53.975	3-5/8	3.6250	92.075	–	19.6851	500
3/4	0.7500	19.05	–	2.1260	54	3-21/32	3.6563	92.869	20	20.0001	508.001
49/64	0.7656	19.447	2-5/32	2.1563	54.769	–	3.6614	93			

Machine Center Services

For over 29 years, Ametric® has provided quality machining services for our customers. Our experienced shop team can customize off-the-shelf items or fabricate a part to your drawing. Three day service is standard on bored-to-size and off-the-shelf modifications.

Customers rely on Ametric® for fast, precision machining -- on time, every time. Ametric®'s combination of experience and equipment, including CNC machining, gives you a winning solution when quality and fast delivery are essential.

MACHINE CENTER ADVANTAGES

- Machining from Prints
- Competitive Pricing
- Variety of Materials
- Quick Turn Around
- CNC Equipment
- Gear Hobbing
- Heat Treating
- PT Experts

METRIC PRODUCTS

Made-To-Order Timing Bar Stock
¾" to 15" OD x 6" to 28" Long

Synchronous Belt Pulleys
T2.5 to T20
AT 5 to AT 20

Metric Sprockets
03B to 32B

HTD
3M, 5M, 8M and 14M

"Super Torque"
3M, 5M, 8M and 14M

Metric Gears
M1 to M6

ANSI PRODUCTS

Gears (14 1/2° PA)
32, 30, 16, 14, 10, 9 Pitch

Synchronous Pulleys
XL to H

Shafting
6" OD to 28" Long

Sprockets
35, 40, 50, 60, 80

Ametric®

Special Orders

We proudly offer more than 100,000 quality power transmission components from one of the most extensive inventories in the business. Even with such a selection, there are times when we need to source special items for our customers. This is when our special orders department puts to use knowledge gained over the past 29 years to find engineered solutions for you.

Call on the special orders department to source special products such as:

- **Special Chain** (Attachments, Backings, Agricultural, Conveyor, Rubber Block, Engineered Chain, and Made to Specifications)
- **Special Belting** (Backings, Lugs, Brushes, Anti-Static Coating, Flat Belting, Polyurethane)
- **Non-Standard Motors** (AC, Explosion Proof, Servo, and Drip Proof)
- **DIN Standard Fasteners** (Retaining Rings, Set Screws, E-Rings)
- **Bushings** (Steel, Cast Bronze and Oil Impregnated)
- **Pumps & Mechanical Seals** (European Sourced)
- **Rod Ends** (Ball, Spherical, Available in Stainless)
- **Couplings** (Chain, Rigid, and Gear)
- **Clutches** (European Sourced)

Our global trading partners understand our high standards in material and quality. The long term relationships we have formed with these partners translates into timely delivery of the products you need.

When you call Ametric® for special products, we go worldwide to be your metric partner.

American Metric® Corporation

Metric Power Transmission Components

CONTACT AND PRODUCT INFORMATION

Telephone: (864) 876-2011
Fax: (864) 876-2630
Website: www.ametric.com
Email: service@ametric.com

52 Metric Road
Laurens, SC 29360

MAJOR PRODUCT LISTINGS

CHAIN: Custom constructions/Flat top/Rubber block/Leaf/PIV/Roller/Accumulator/ANSI/Assembled to order/Attachments/Bush/Conveyor/Draw bench/Hollow pin/Extended pin/Long pitch/Nickel plated/Stainless steel/Side bow/Stud

BELTS: American pitch/Endless synchronous/HTD pitch/AT pitch/Metric pitch/Open ended synchronous/Special constructions/Special backings/Spliced synchronous/Super torque/V-belting/Variable speed

SPROCKETS: Flat top/Hardened teeth/Idler, tension and freewheel/Plastics/Stainless steel/Taper bushing/Tensioners/Machined to specifications

GEARING: Nylon gear rack/Round gear rack/Stainless steel gear rack/Ground gear rack/Injection molded gear rack/Spiral bevel/Bevel/Cast iron spur/Induction hardened spur/Induction molded plastic spur/Nylon spur/Spur/Stainless steel spur

MOTORS: Electric single phase/Electric three phase disk brake/Drip and Explosion proof/Two speed/Three phase

REDUCERS: Right angle/European replacements/Worm gears

PULLEYS: Bar stock in metric, American, and HTD pitches/Flanges/Pulleys in American, Metric, HTD,AT and Super Torque profiles/Taper bushing pulleys in American, HTD and Super Torque/Variable speed/Poly-V/Adjustable taper bushing /V-belt sheaves/Sheaves available in aluminum/Taper bushing V-belt sheaves

SHAFTING: Drill rod/Case hardened shafting/Ground and polished stainless steel/Ground and polished/Key stock/Key stock and woodruff kits/Shaft keys/Woodruff keys

BUSHINGS: Oil impregnated sintered bronze/ANSI inch bore taper/BSW inch bore taper/Metric bore taper

OTHER PRODUCTS: Adapter sleeves/Ball joints/Stainless and chromium steel balls/Bearing units/Calipers/Chain breakers/Set collars/Gear couplings/Star couplings/Thread gauges/Grease fittings in inch and metric/Machine handles/Hex rod/KM nuts for shafts and withdrawal sleeves/Lock nuts with nylon inserts/Locking ring elements/Oil sight glasses/O-ring in kits and cord/Hardened dowel pins/Grooved pins/Rolled pins/Taper pins/Retaining rings/Snap rings/Rod ends/Shaft seals/Set screws/Splines/Arm tensioners/Pulley tensioners/Sprocket tensioners/Threaded rod/Hydraulic tubing/Universal joints/Washers/Withdrawal sleeves

American Metric® Corporation

Metric & ANSI Power Transmission Components

Ametric®

Telephone: (864) 876-2011
Fax: (864) 876-2630
After Hours: (800) 651-5920

52 Metric Road
Laurens, SC 29360
Email: service@ametric.com
Website: www.ametric.com

A complete selection of metric and ANSI accessories, including rod ends, shafting, seals, couplings, O-rings, bronze bushings, calipers and bearings are in stock.

A World Class International Manufacturing Company

Choose from a complete line of chain, sprockets and attachments in a number of materials. Attachment chain can be assembled in 48 hours. Special configurations can be sourced.

Metric motors and gear boxes are ready to ship. Non-standard units can be sourced for your requirements. Call for the complete motor and reducer catalog.

Check our new line of metric self-aligning linear ball bearing units, housings, shaft supports, end blocks and hardened shafting. Call for the complete linear catalog.

Standard and non-standard timing belts and pulleys in a variety of materials are available. Special constructions can be sourced as required.

Bevel gear sets, spiral bevel gear sets and gear rack are available to ship today. If needed, our shop can modify these parts to your specifications.

A full selection of stocked metric V-belts, variable speed belts and pulleys are ready for immediate shipment.